[Body]
(Single Cab)

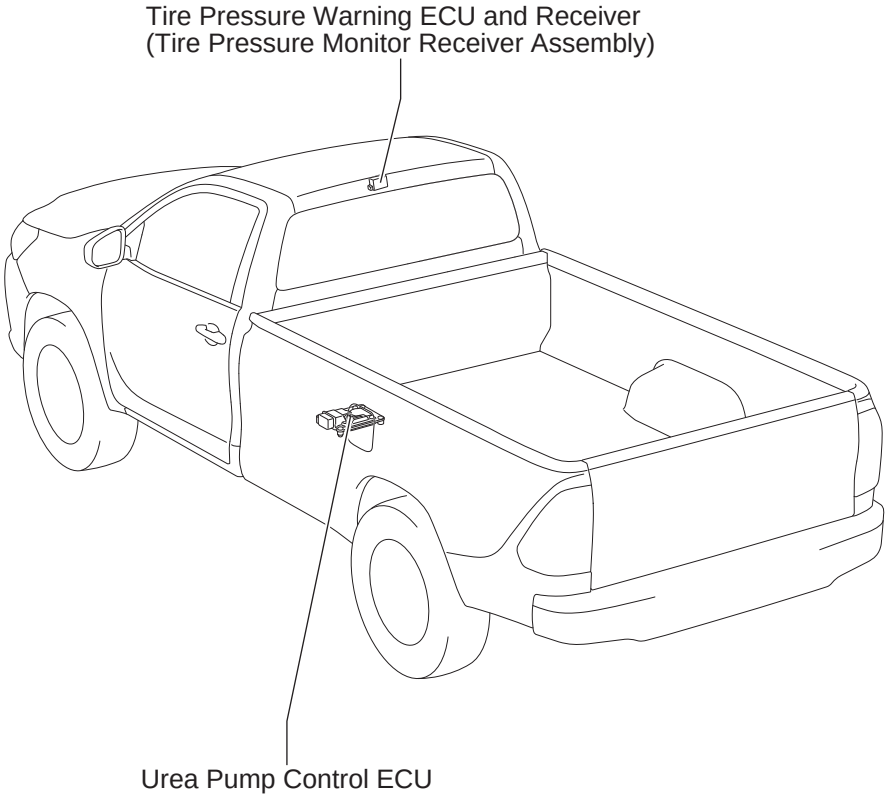

cardiagn.com

(Extra Cab)

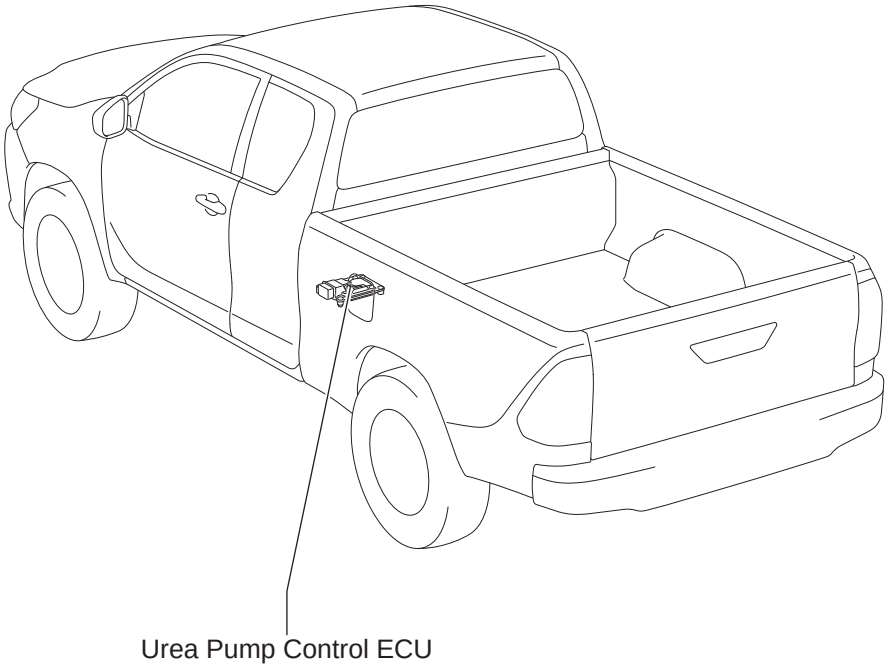

cardiagn.com

[Body]
(Double Cab)

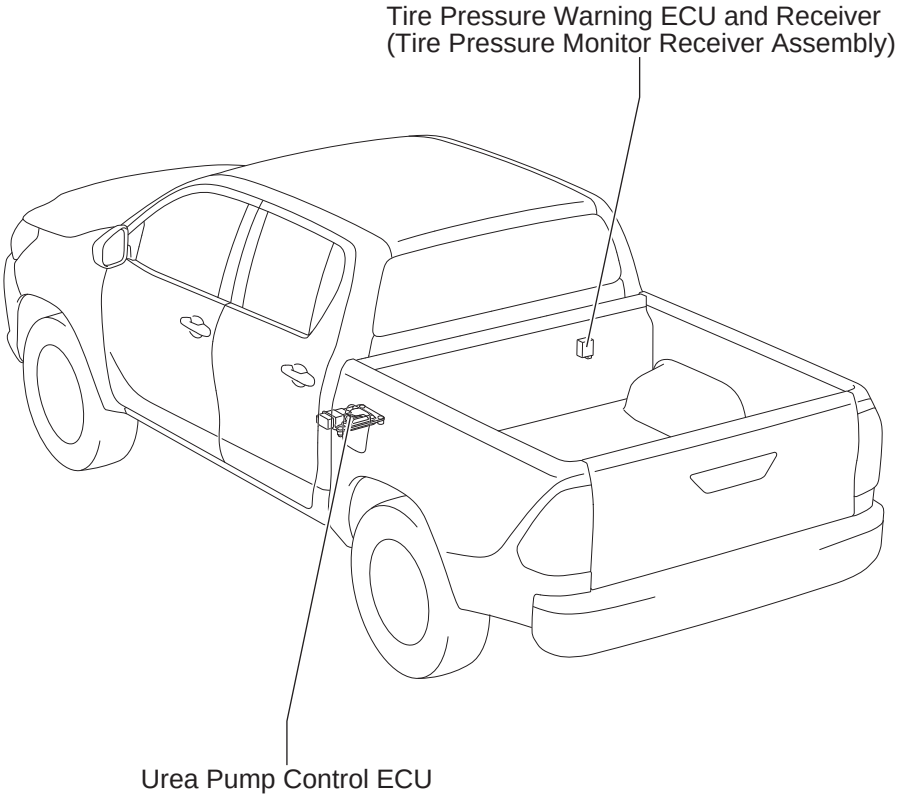

cardiagn.com

[Engine Compartment]
(LHD)

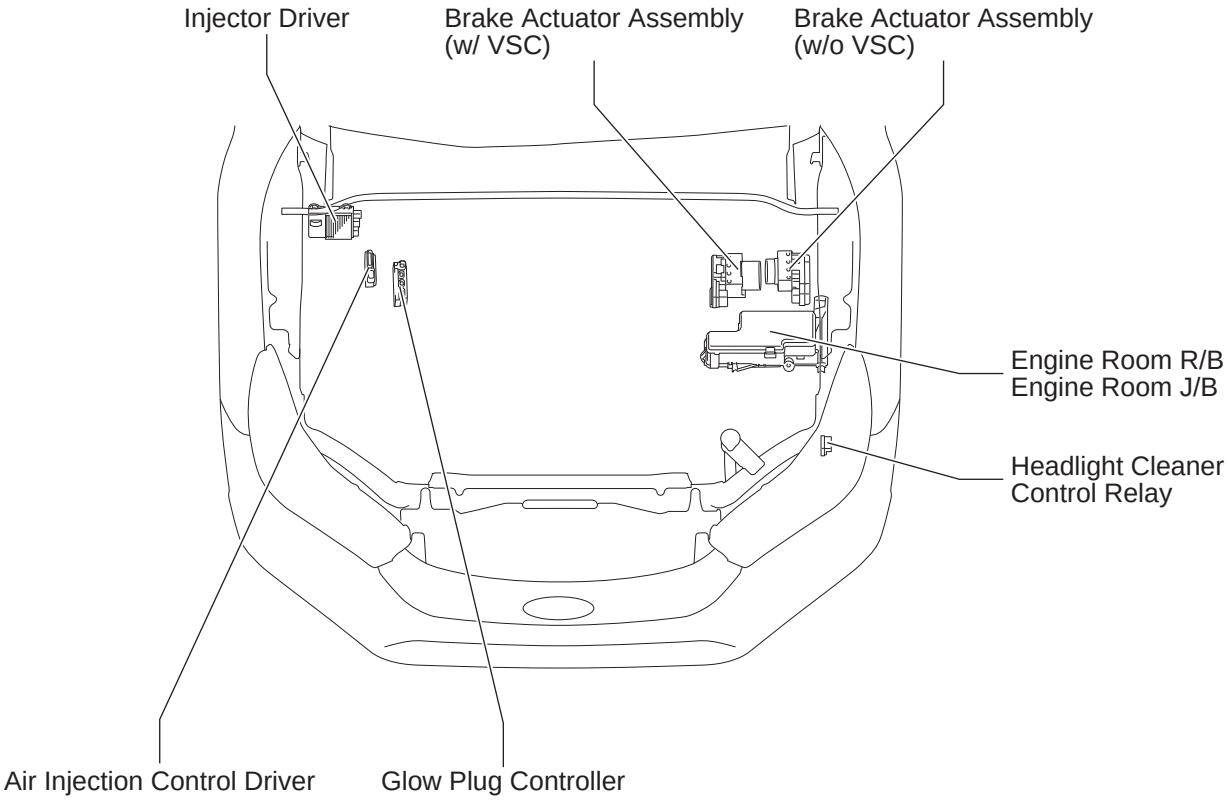

cardiagn.com

(RHD)

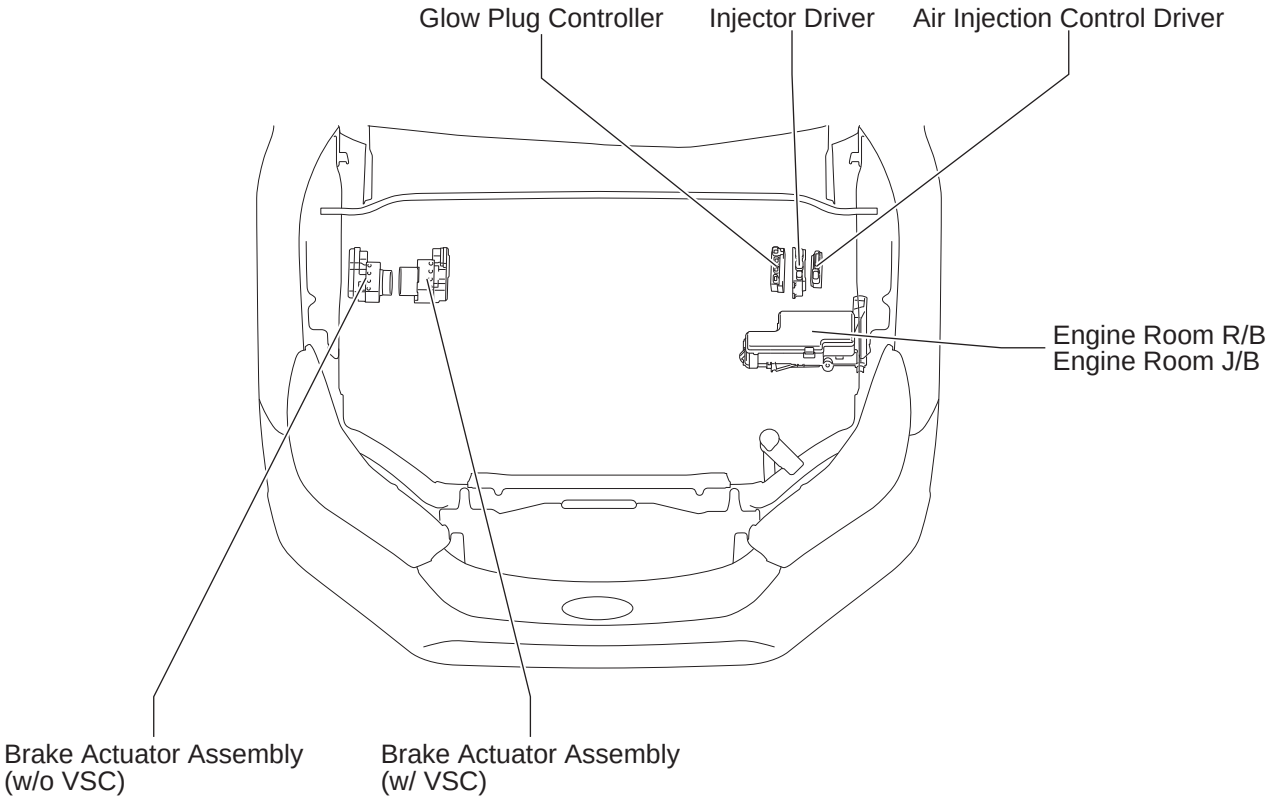

cardiagn.com

① : Engine Room R/B	Front Fender Apron LH
⬭ : Engine Room J/B	

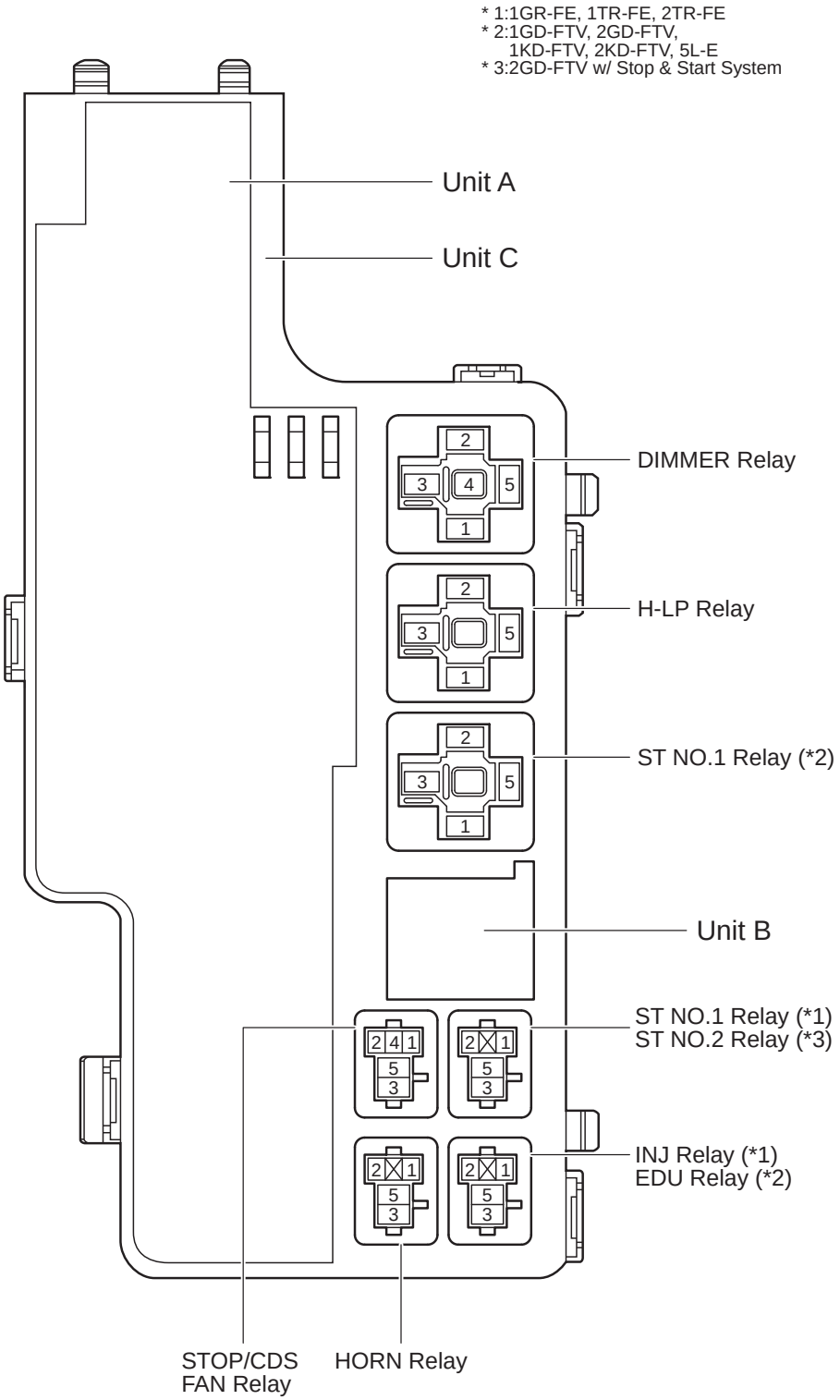

cardiagn.com

Unit A

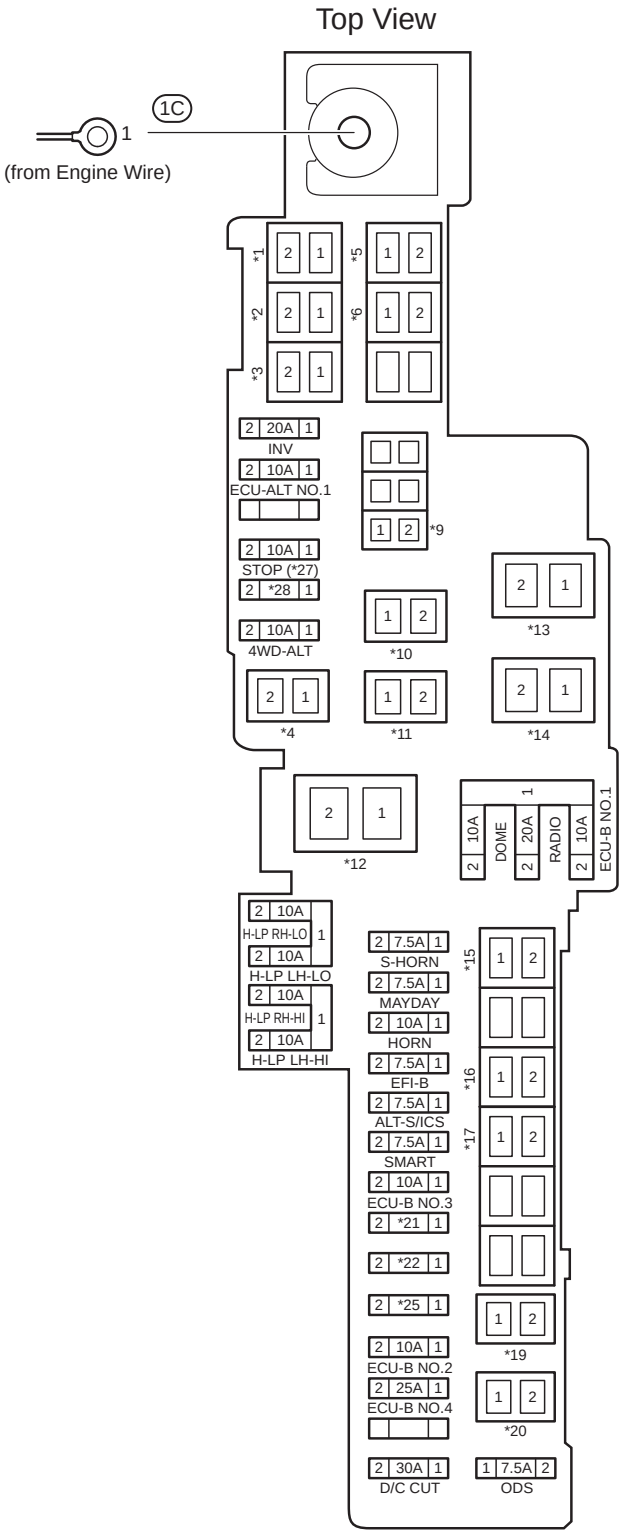

* 1:50A ABS NO.1
* 2:30A ABS NO.2
* 3:30A R/B I/P-ALT
* 4:50A R/B FLOOR-ALT
* 5:30A P/SEAT (*26)
  30A P/SEAT(D) (*27)
* 6:30A PTC HTR NO.2
* 9:50A PTC HTR NO.1
* 10:30A H-LP CLN
* 11:30A CDS FAN/PTC HTR NO.3
* 12:140A ALT
* 13:80A GLOW
* 14:60A J/B-B
* 15:40A BBC NO.3
* 16:40A BBC NO.1
* 17:30A ST NO.1 (1GR-FE, 1TR-FE, 2TR-FE)
  50A ST NO.1
  (1GD-FTV, 2GD-FTV, 1KD-FTV, 2KD-FTV, 5L-E)
* 19:50A AIR PMP (w/ Air Injection Control Driver)
  50A DCU-MAIN (w/ Urea Pump Control ECU)
* 20:40A H-LP MAIN
* 21:20A A/F HTR (1GR-FE, 1TR-FE, 2TR-FE)
  25A EDU
  (1GD-FTV, 2GD-FTV, 1KD-FTV, 2KD-FTV, 5L-E)
* 22:10A STRG LOCK/AM2 NO.1
* 25:15A INJ (1GR-FE, 1TR-FE, 2TR-FE)
  30A ST NO.2 (2GD-FTV w/ Stop & Start System)
* 26:Before Aug. 2017 Production
* 27:From Aug. 2017 Production
* 28:10A STOP (*26)
  10A STRG HTR (*27)

cardiagn.com

① : Engine Room R/B	Front Fender Apron LH
⬭ : Engine Room J/B	

Unit A

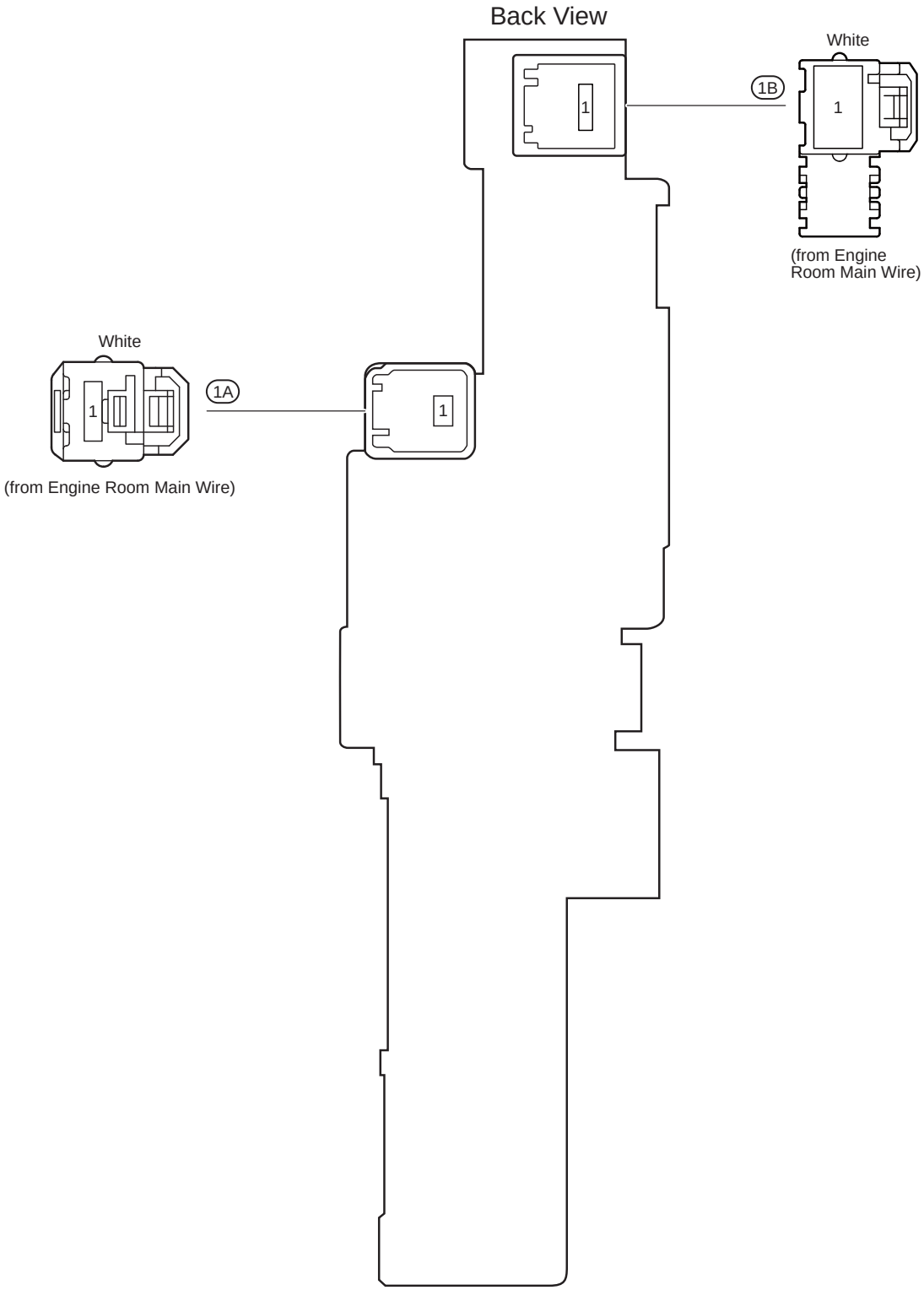

cardiagn.com

Unit B

(1GR-FE, 1TR-FE, 2TR-FE)

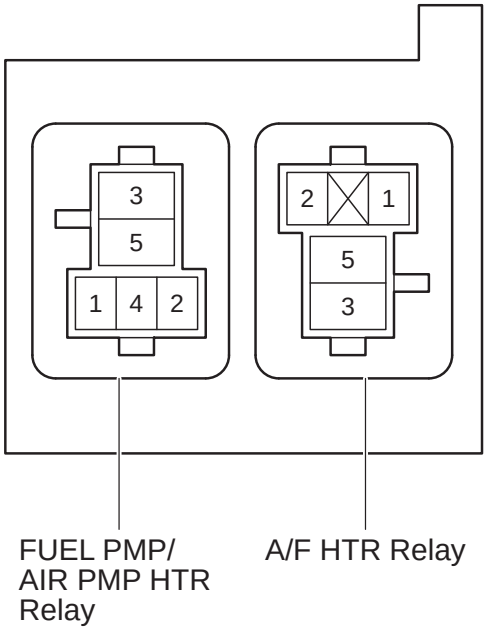

(1GD-FTV, 2GD-FTV, 1KD-FTV, 2KD-FTV, 5L-E)

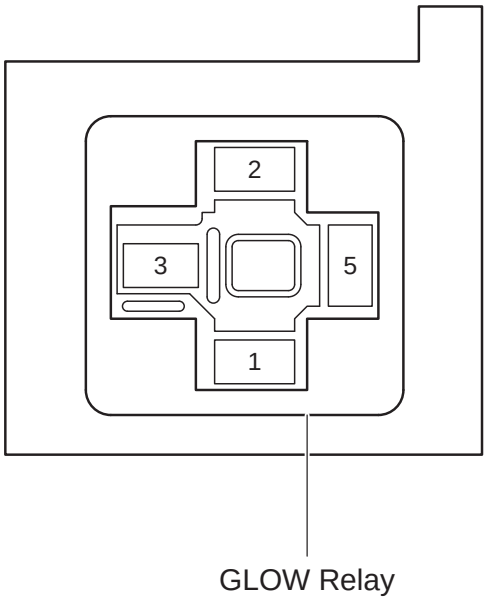

cardiagn.com

[Engine Room R/B and Engine Room J/B Inner Circuit]

* 1:1GR-FE, 1TR-FE, 2TR-FE
* 2:1GD-FTV, 2GD-FTV, 1KD-FTV, 2KD-FTV, 5L-E
* 6:w/ Air Injection Control Driver
* 7:w/ Urea Pump Control ECU
* 8:Before Aug. 2017 Production
* 9:From Aug. 2017 Production

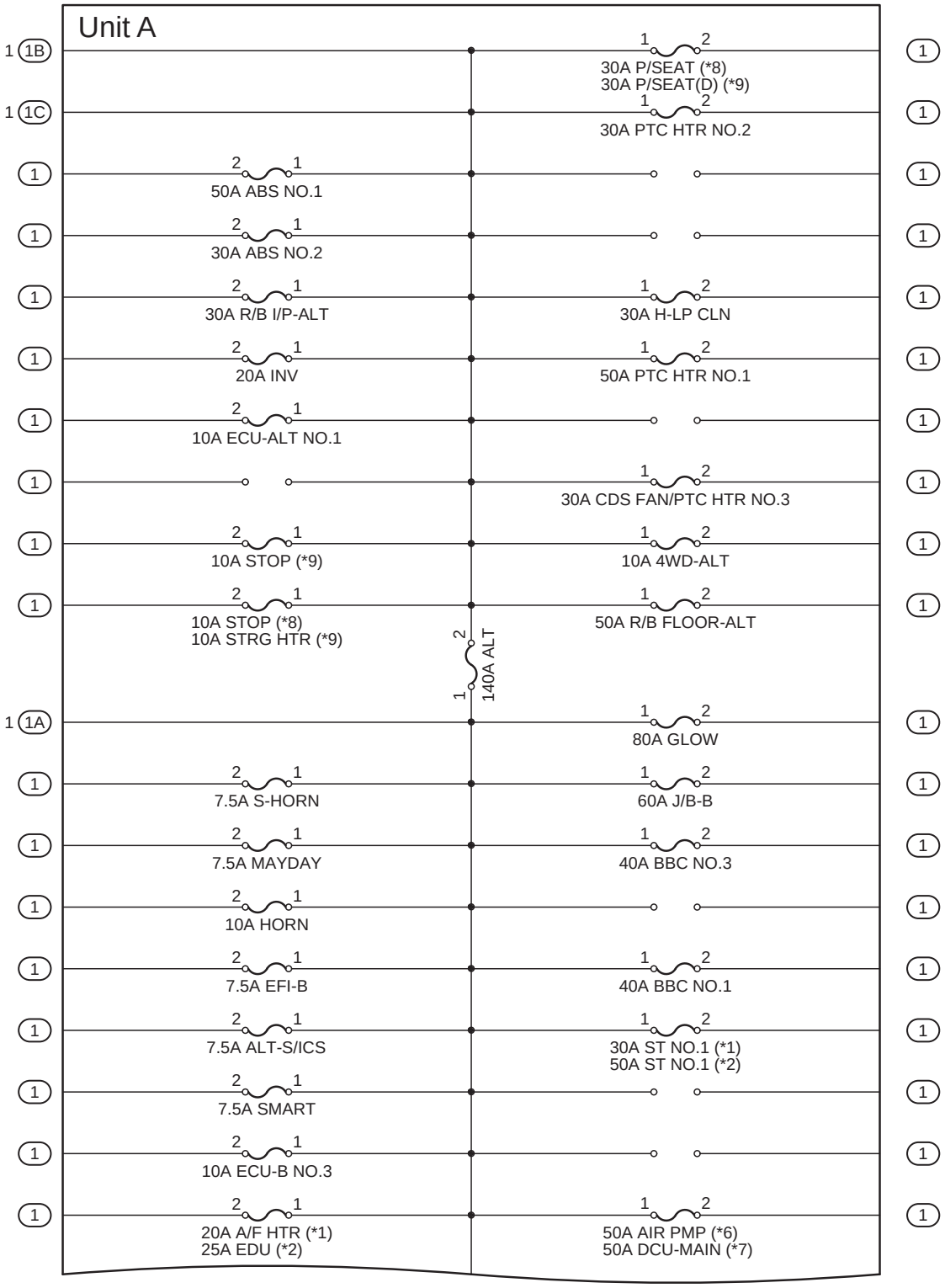

(Cont. Next Page)

cardiagn.com

* 1:1GR-FE, 1TR-FE, 2TR-FE
* 3:Halogen Type Headlight
* 5:2GD-FTV w/ Stop & Start System

(Cont'd)

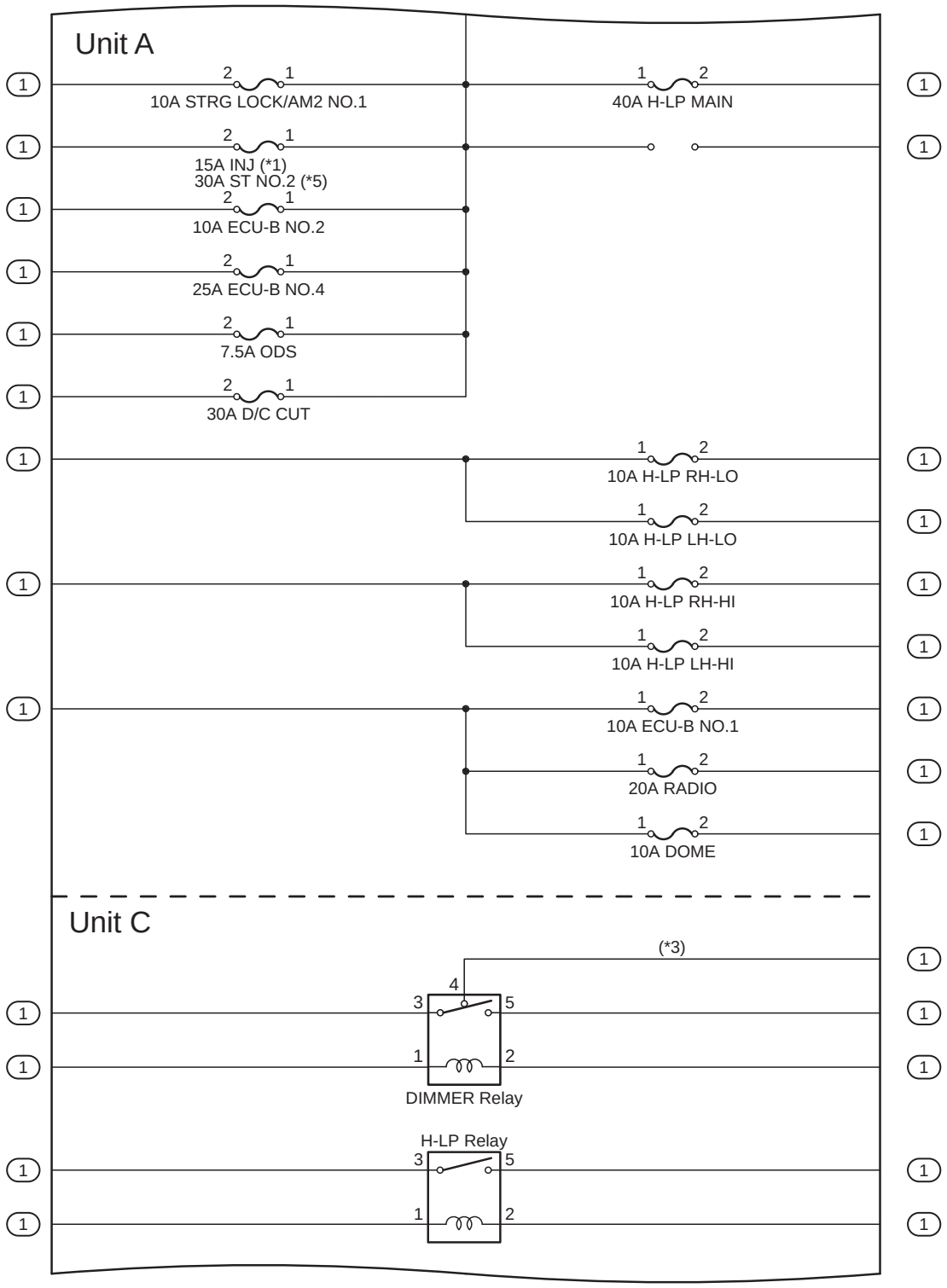

(Cont. Next Page)

cardiagn.com

[Engine Room R/B and Engine Room J/B Inner Circuit]

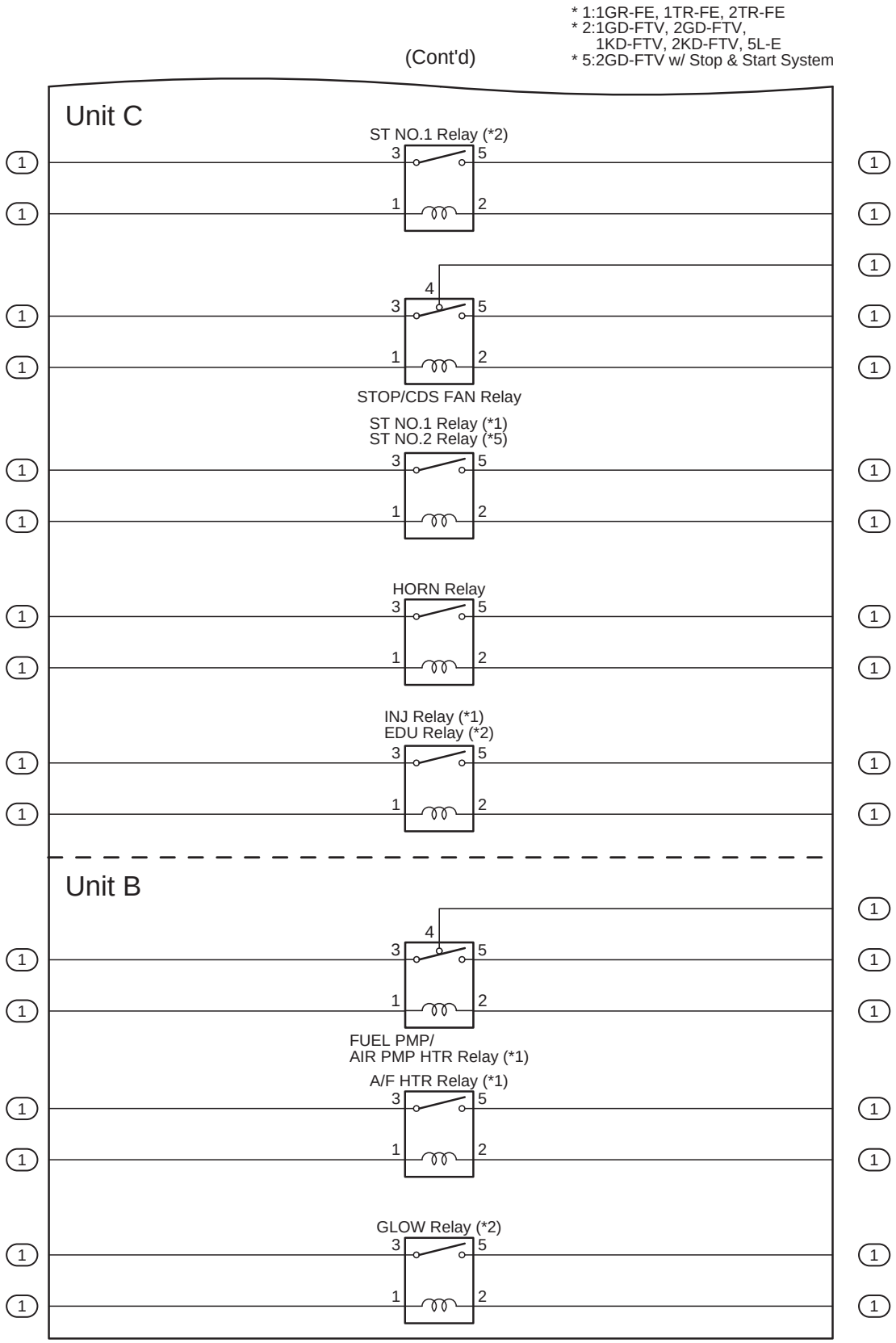

cardiagn.com

: Instrument Panel J/B Assembly	Cowl Side Panel LH

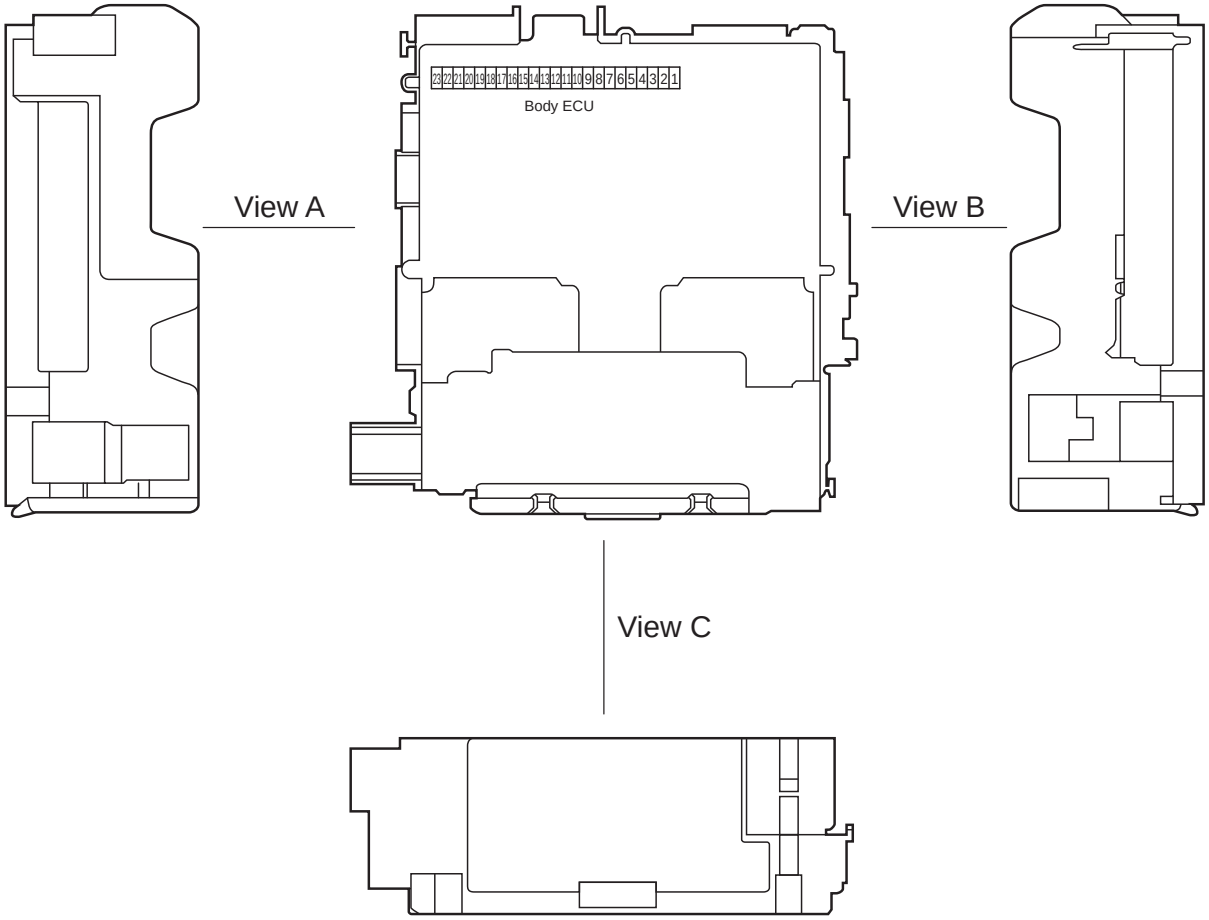

cardiagn.com

View A

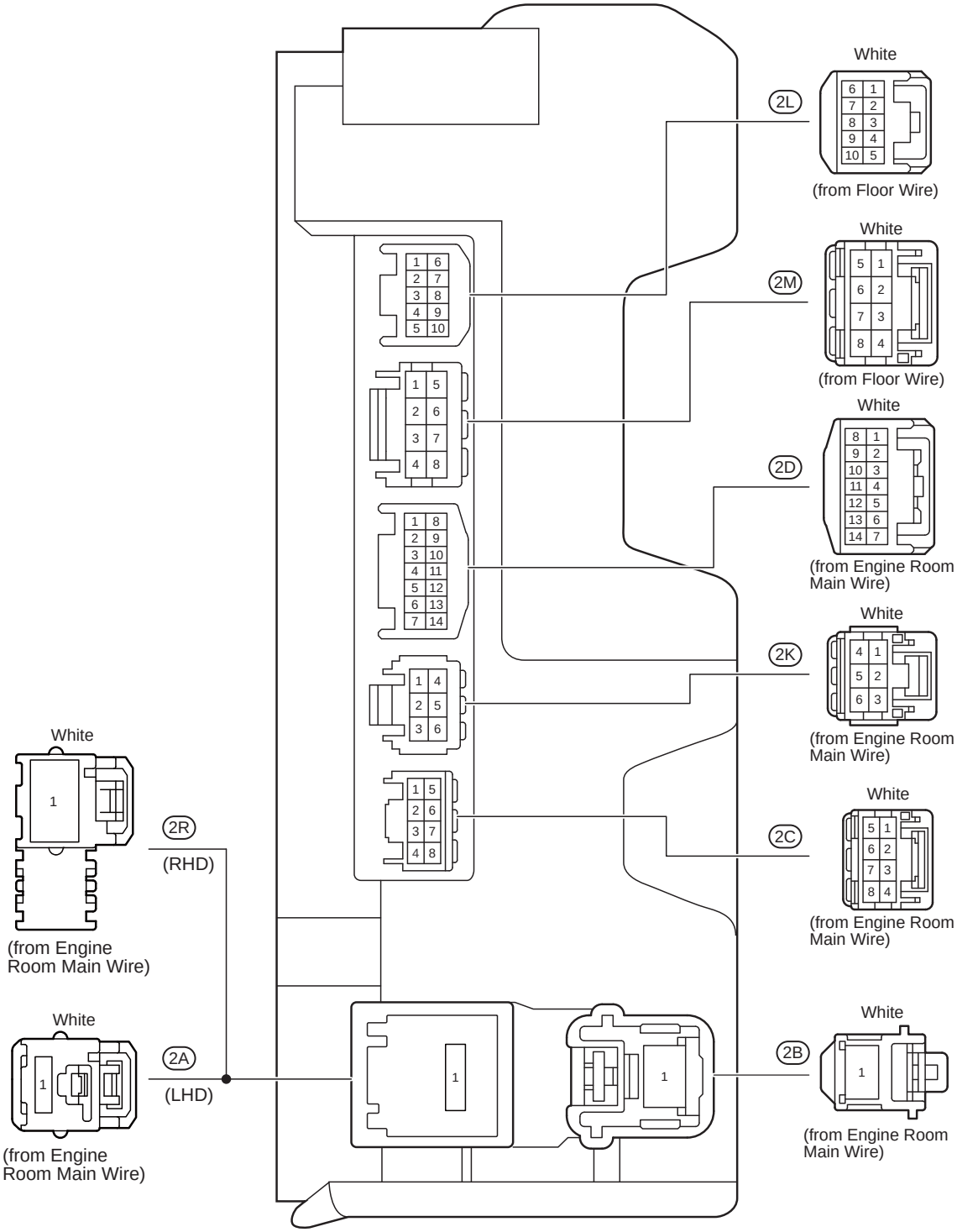

cardiagn.com

: Instrument Panel J/B Assembly	Cowl Side Panel LH

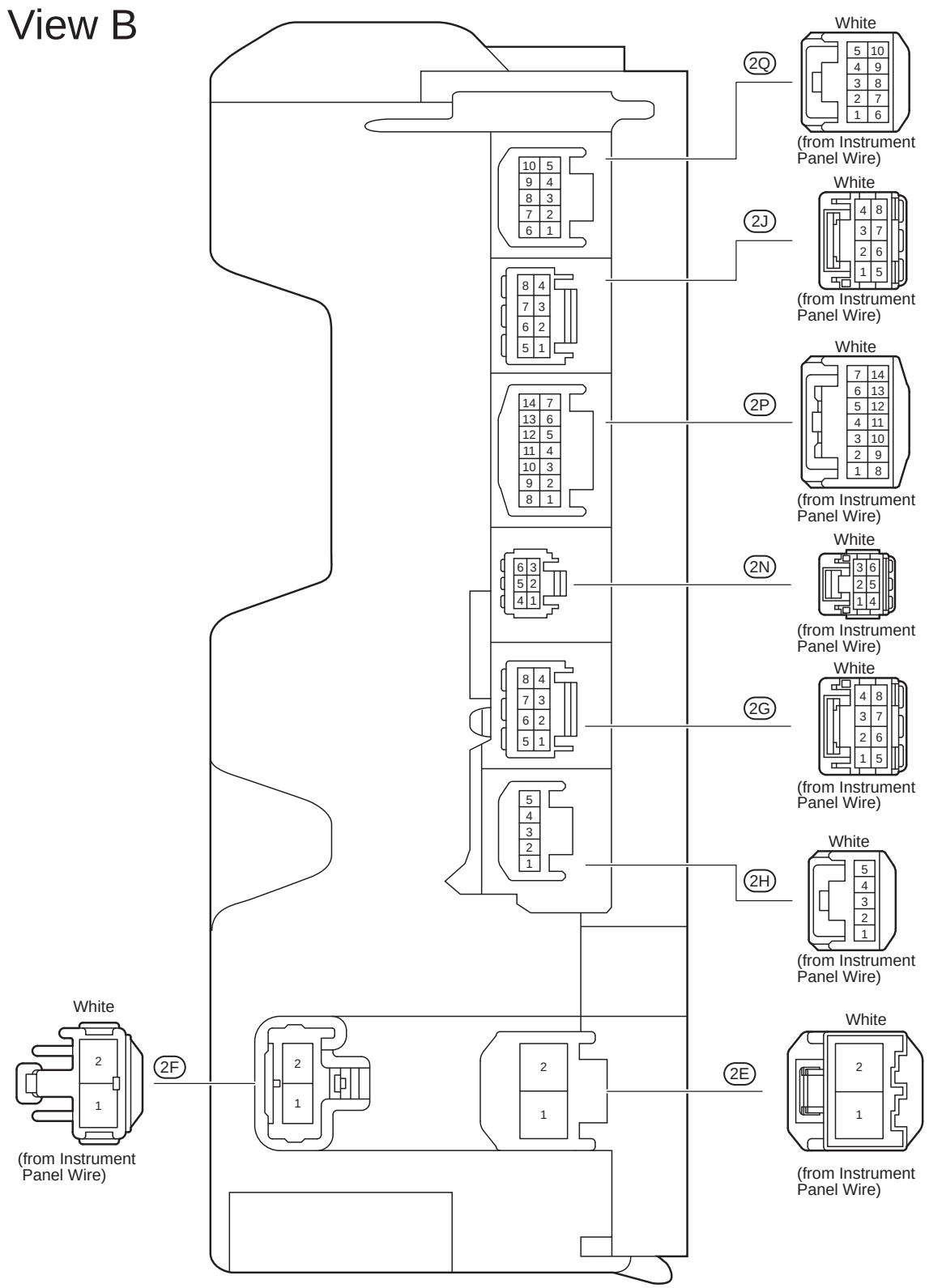

cardiagn.com

View C

* 1:10A ETCS (1GR-FE, 1KD-FTV, 2KD-FTV, 1TR-FE, 2TR-FE, 5L-E)
  25A EFI-MAIN NO.1 (1GD-FTV, 2GD-FTV)
* 2:25A EFI-MAIN NO.1 (1GR-FE, 1KD-FTV, 2KD-FTV, 1TR-FE, 2TR-FE, 5L-E)
  25A EFI-MAIN NO.2 (1GD-FTV, 2GD-FTV)
* 3:10A TAIL (1GR-FE, 1KD-FTV, 2KD-FTV, 1TR-FE, 2TR-FE, 5L-E)
  10A ECU-ALT NO.2 (1GD-FTV, 2GD-FTV)
* 4:10A ECU-ALT NO.2 (1GR-FE, 1KD-FTV, 2KD-FTV, 1TR-FE, 2TR-FE, 5L-E)
  10A TAIL (1GD-FTV, 2GD-FTV)

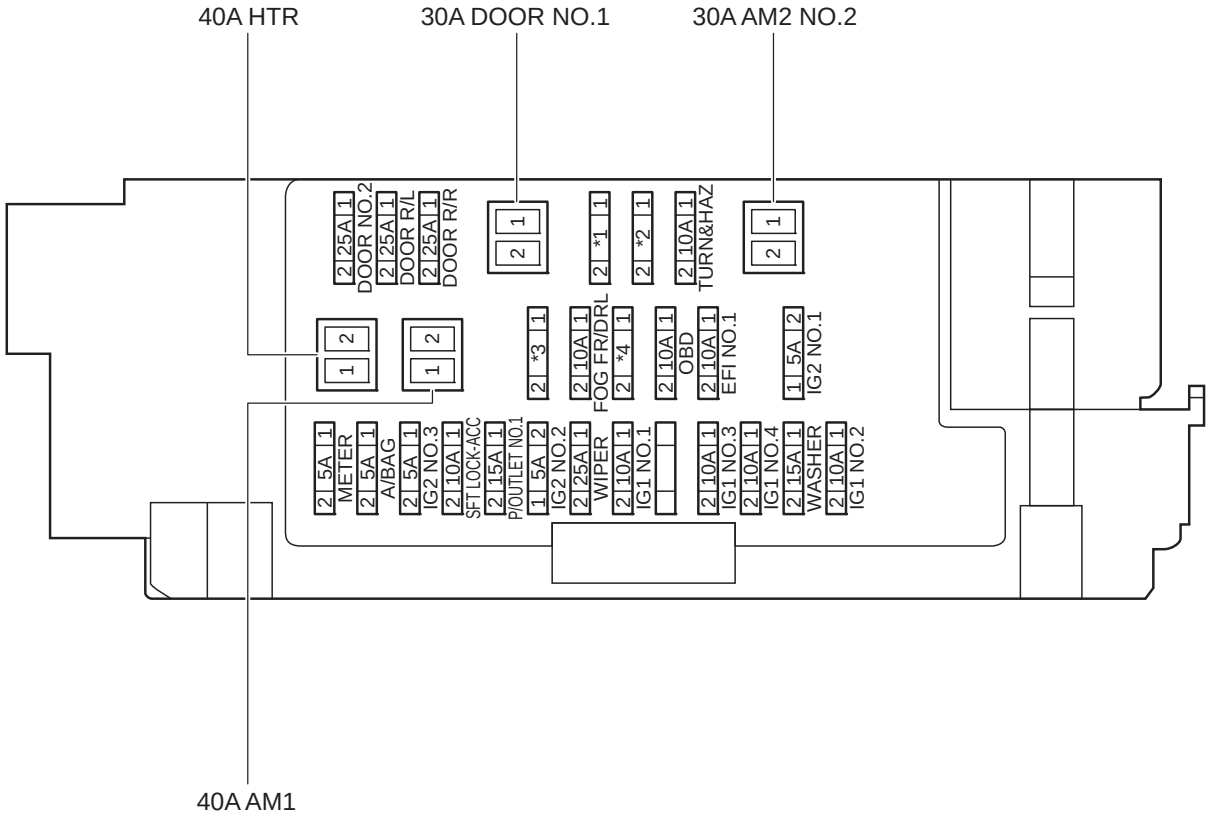

cardiagn.com

[Instrument Panel J/B Assembly Inner Circuit]

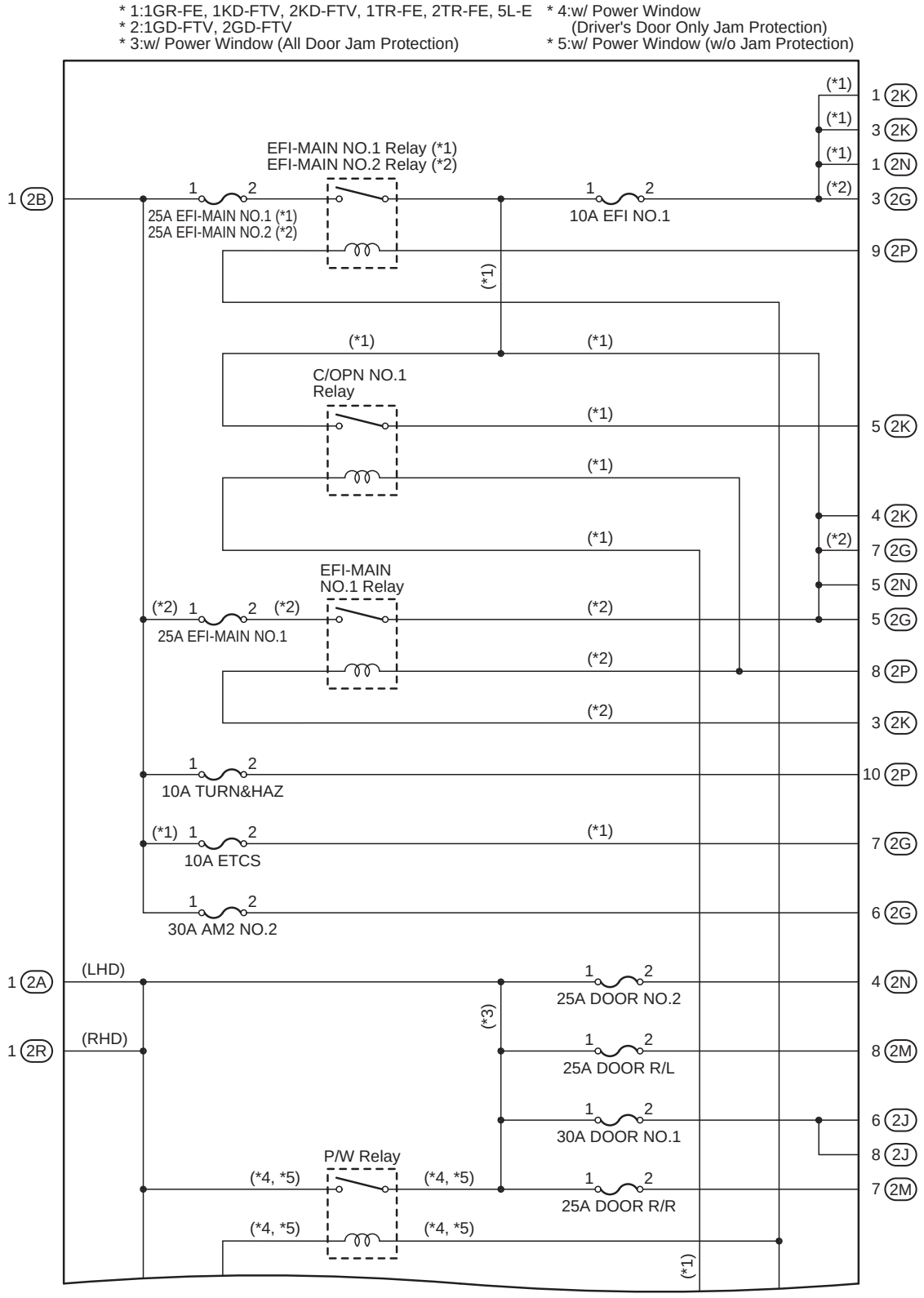

(Cont. Next Page)

cardiagn.com

* 1:1GR-FE, 1KD-FTV, 2KD-FTV, 1TR-FE, 2TR-FE, 5L-E
* 2:1GD-FTV, 2GD-FTV
* 4:w/ Power Window (Driver's Door Only Jam Protection)
* 5:w/ Power Window (w/o Jam Protection)

(Cont'd)

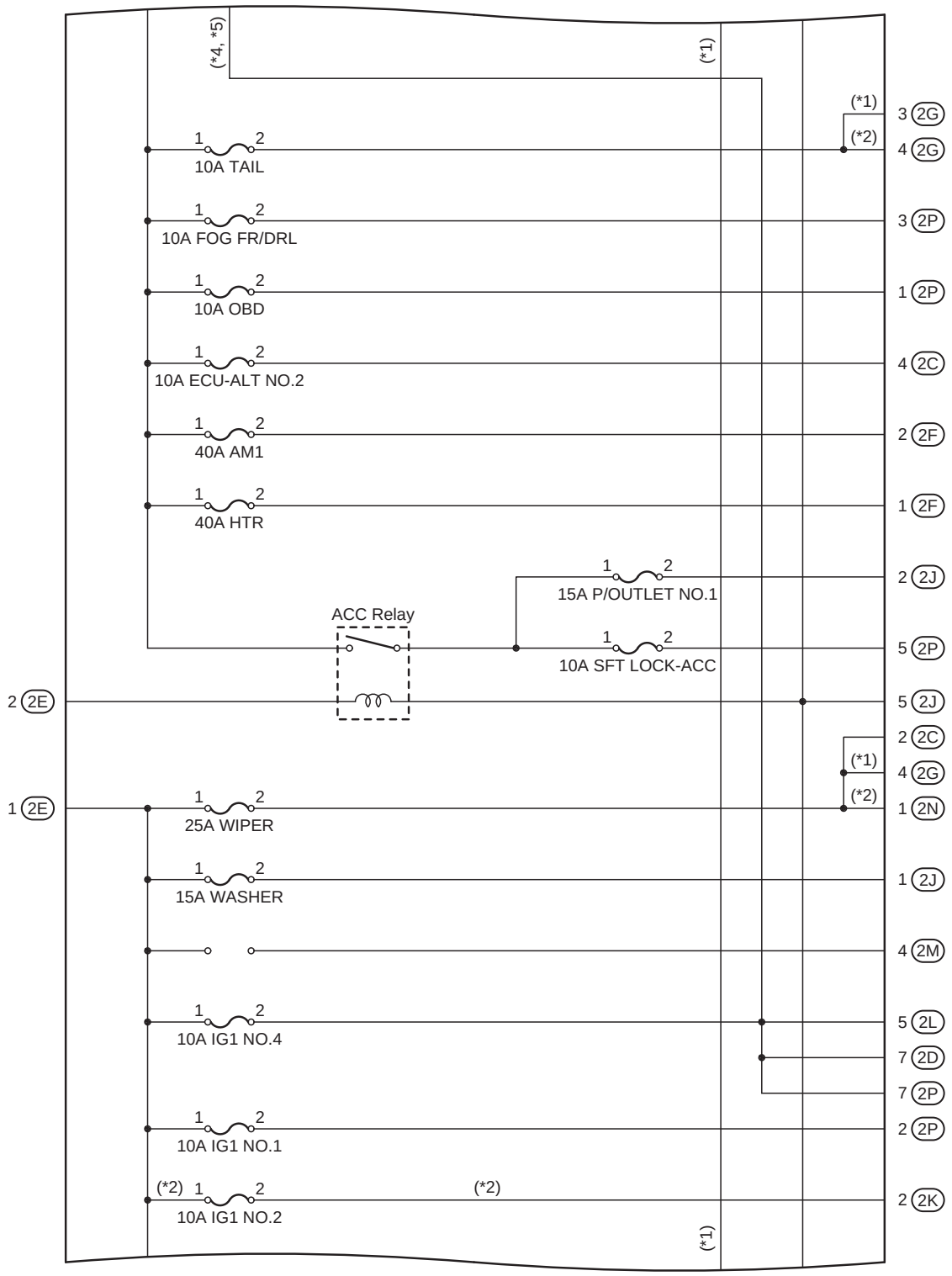

(Cont. Next Page)

cardiagn.com

[Instrument Panel J/B Assembly Inner Circuit]

* 1:1GR-FE, 1KD-FTV, 2KD-FTV, 1TR-FE, 2TR-FE, 5L-E
* 2:1GD-FTV, 2GD-FTV
* 6:Double Cab w/ Outer Rear View Mirror Side Turn Signal Light w/ Speed Sensitive Automatic Door Lock
* 7:w/ Collision Door Lock Release Function

(Cont'd)

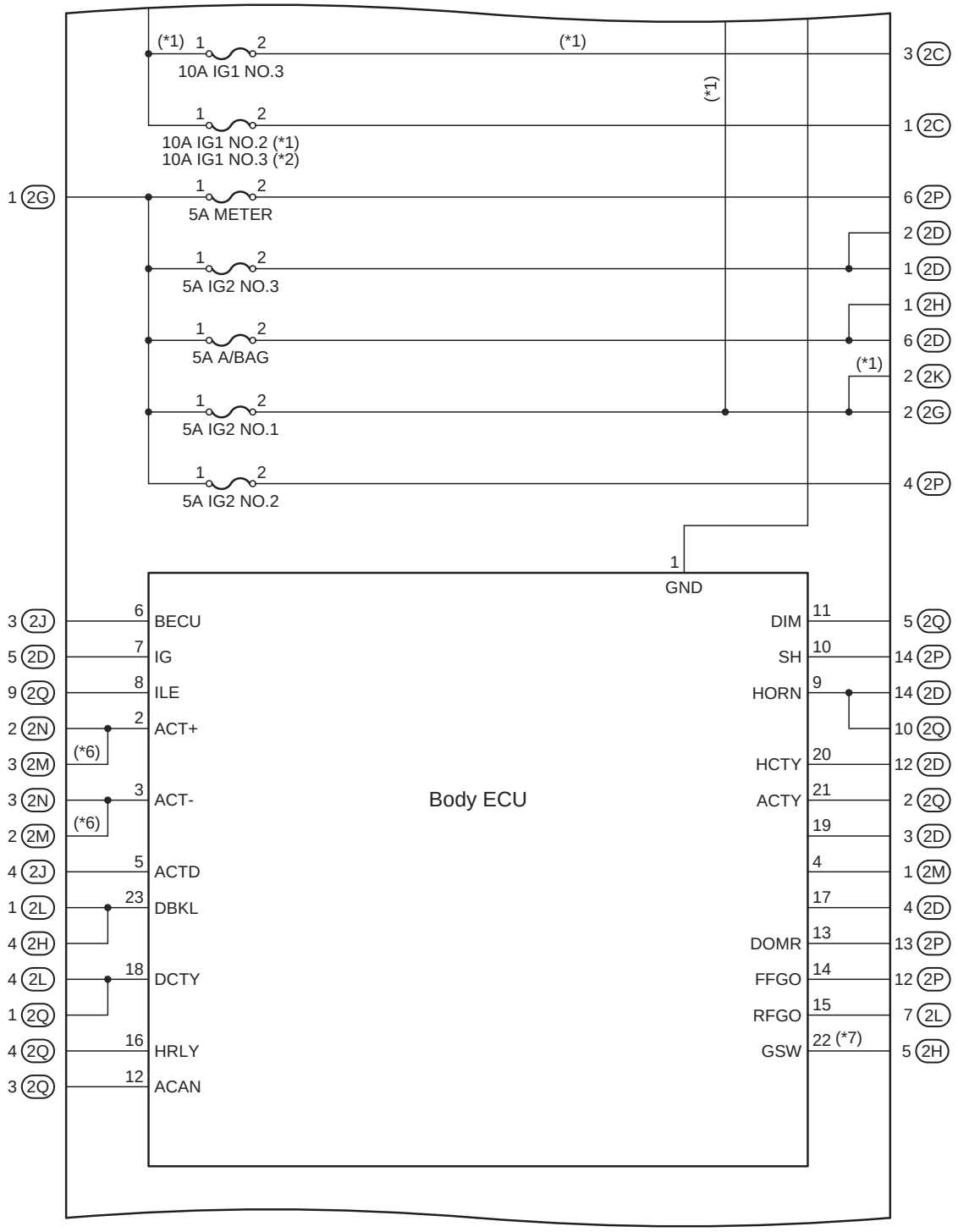

(Cont. Next Page)

cardiagn.com

* 8:w/ Front Fender Side Turn Signal Light

(Cont'd)

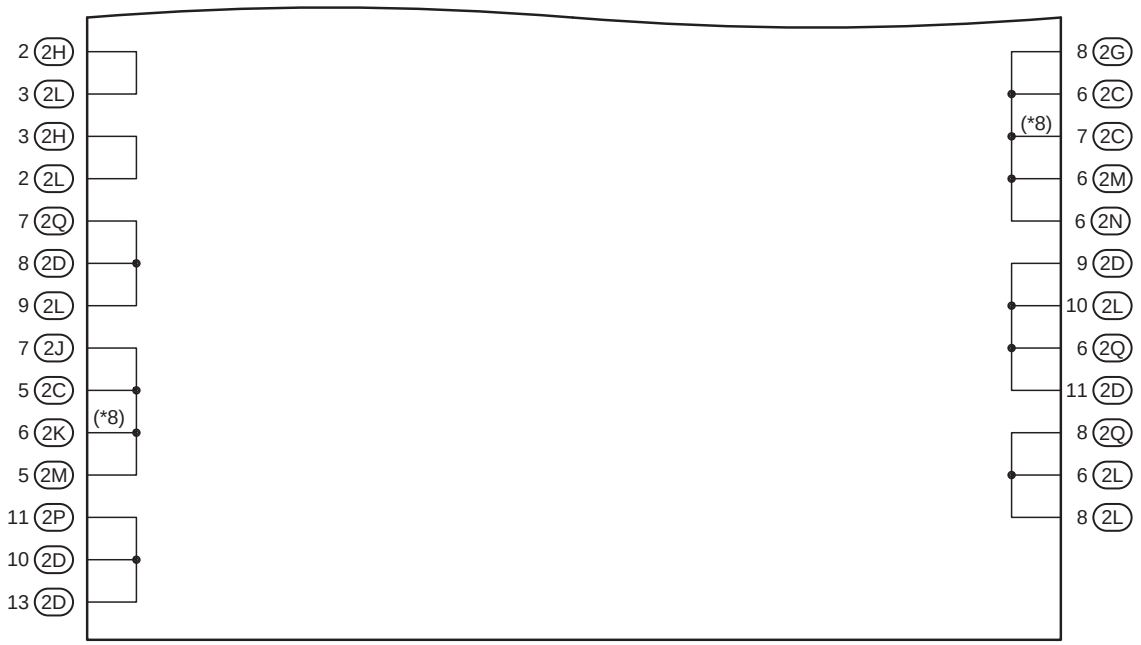

cardiagn.com

[Instrument Panel]
(LHD)

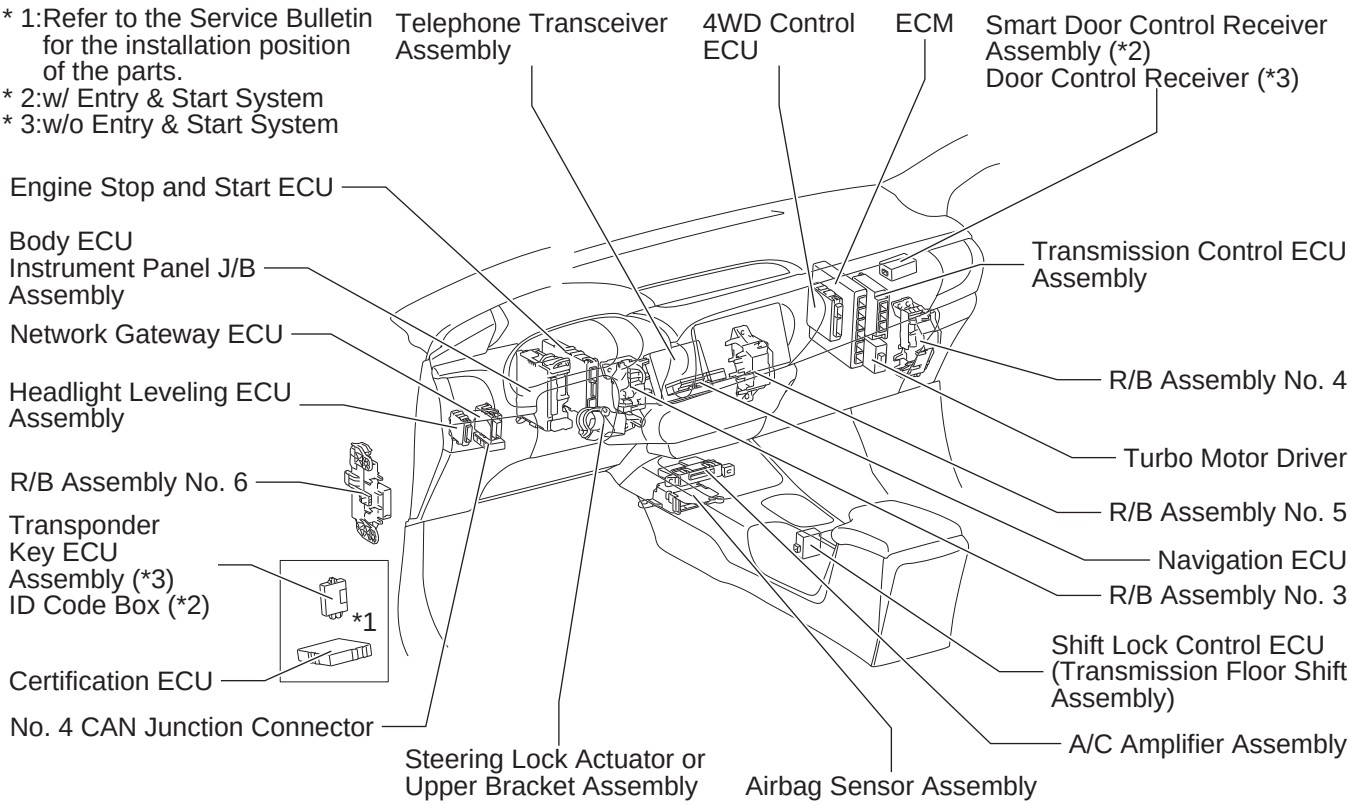

cardiagn.com

(RHD)

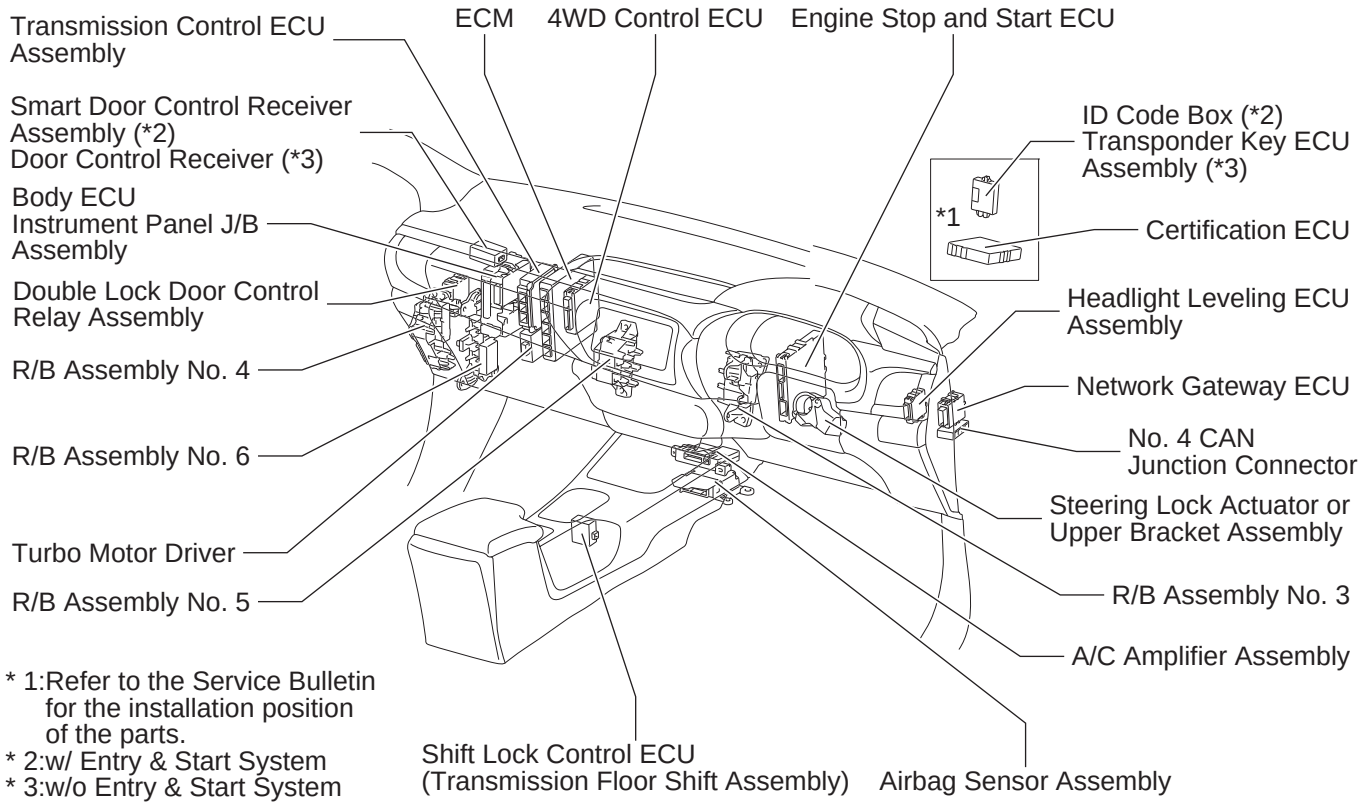

cardiagn.com

No. 4 CAN Junction Connector	LHD : Cowl Side Panel LH
	RHD : Cowl Side Panel RH

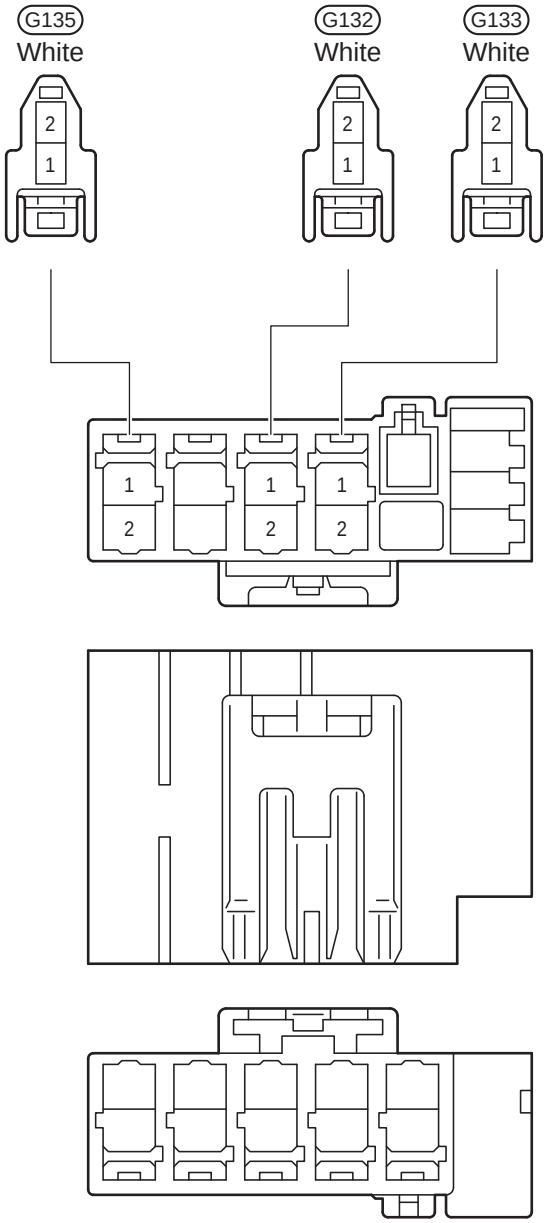

*** G132, G133 and G135 are Interchangeable.**

cardiagn.com

[No. 4 CAN Junction Connector Inner Circuit]

G132(A), G133(B), G135(D)
No. 4 CAN Junction Connector

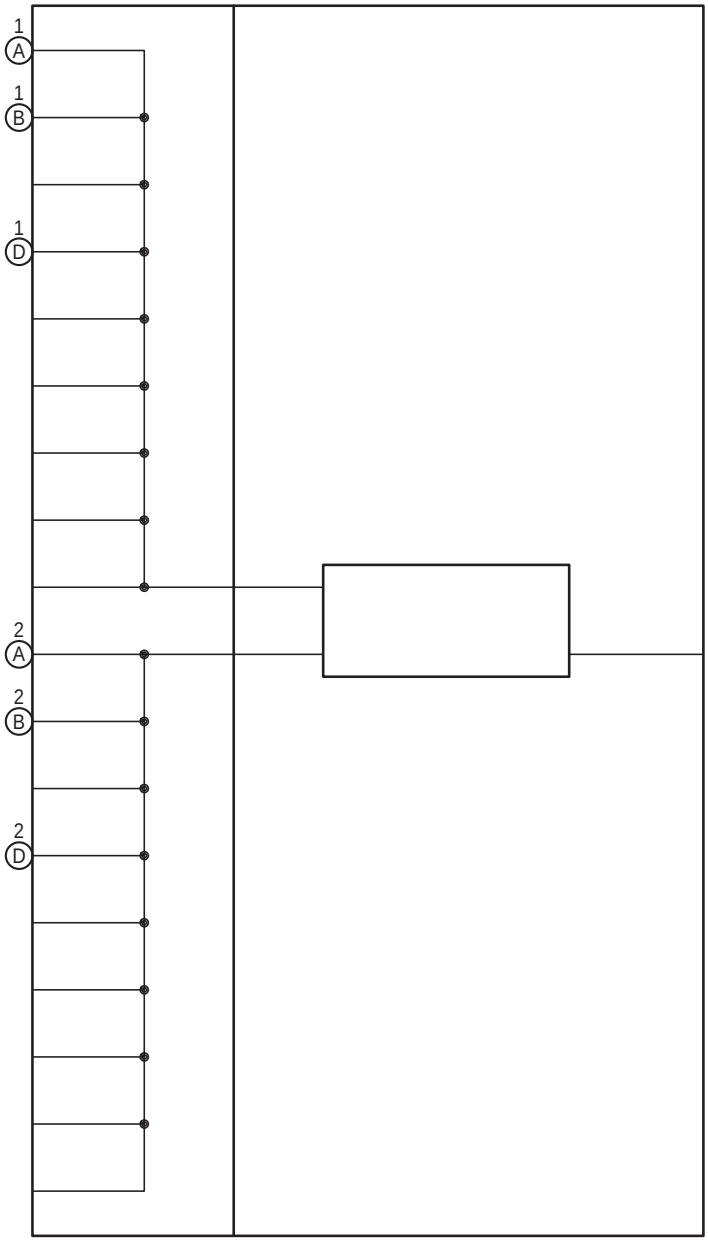

cardiagn.com

③ : R/B Assembly No. 3	LHD : Instrument Panel Brace LH RHD : Instrument Panel Brace RH

(LHD)

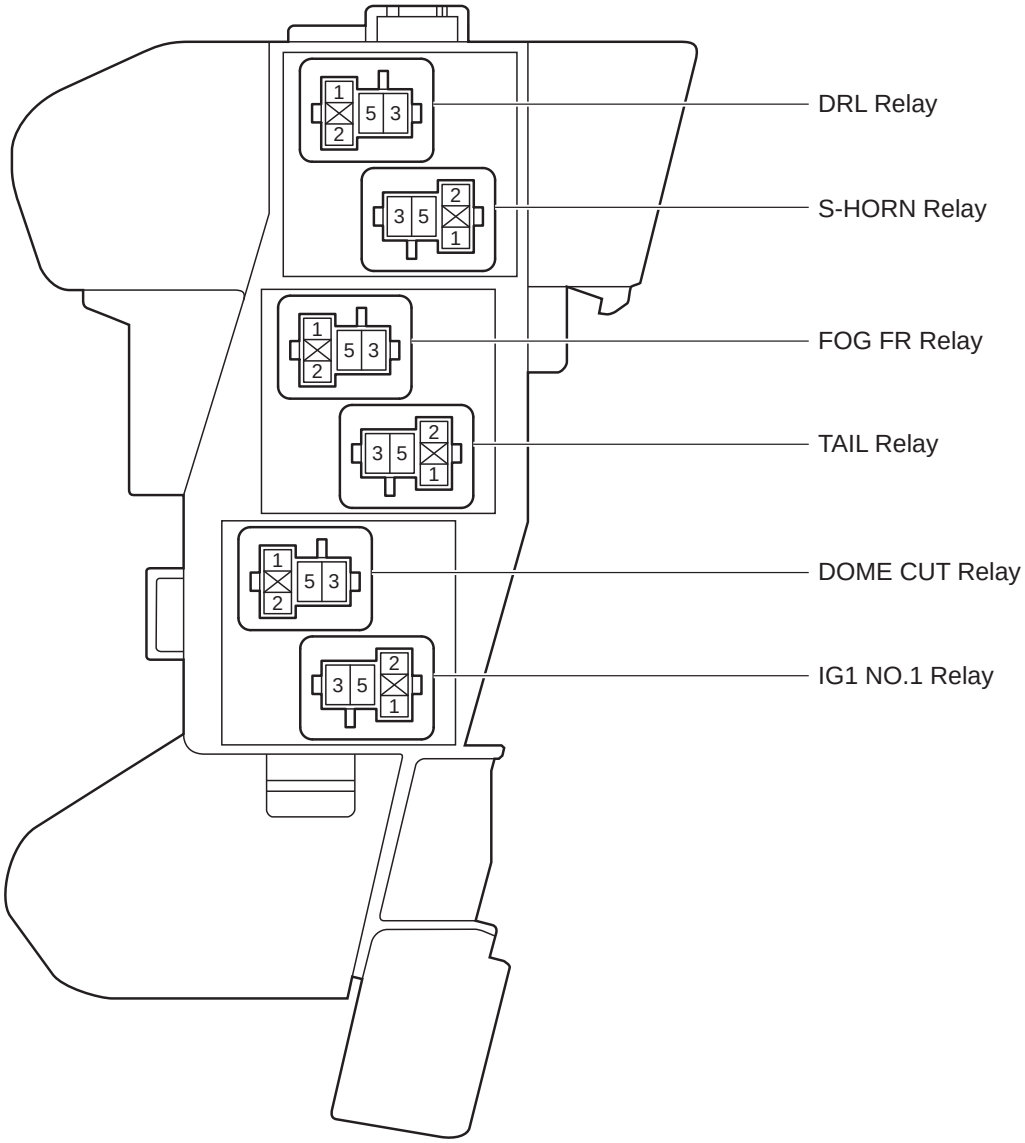

cardiagn.com

(RHD)

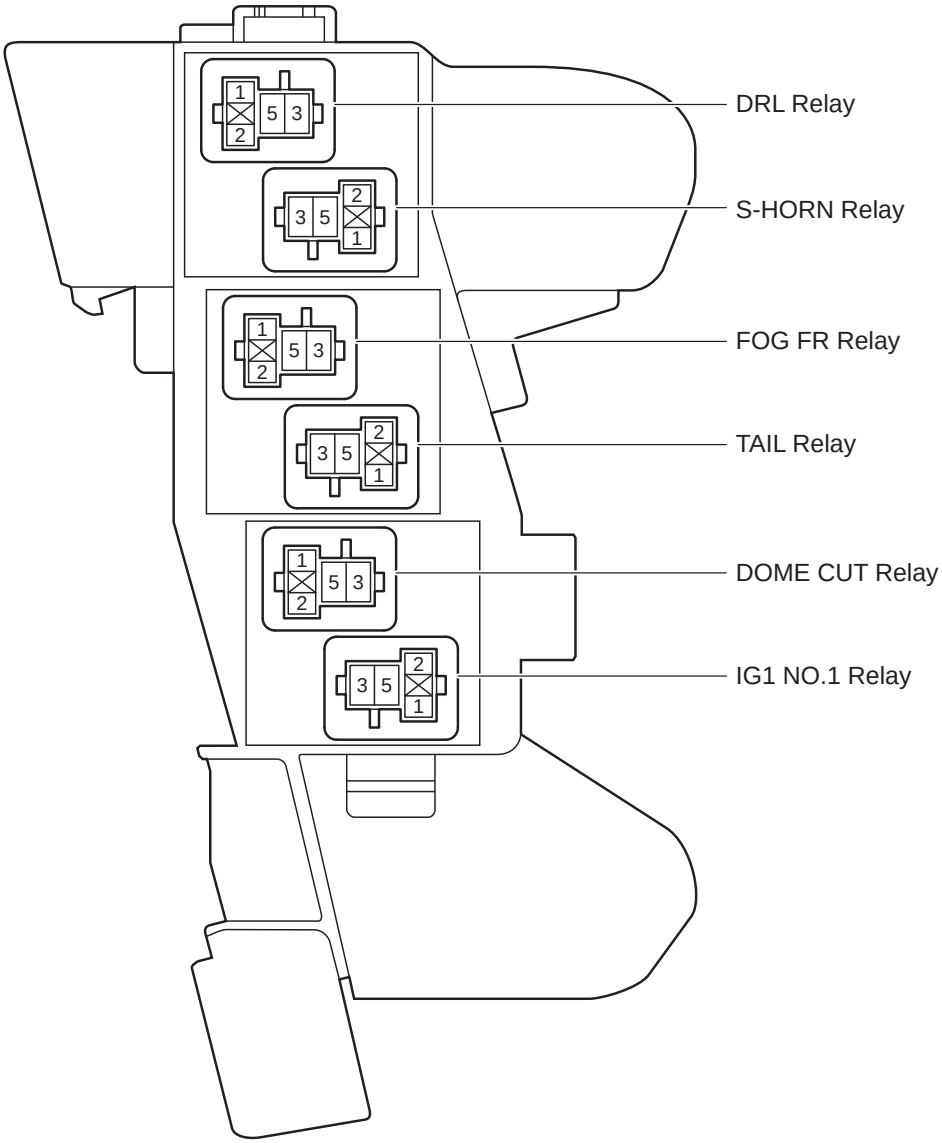

cardiagn.com

[R/B Assembly No. 3 Inner Circuit]

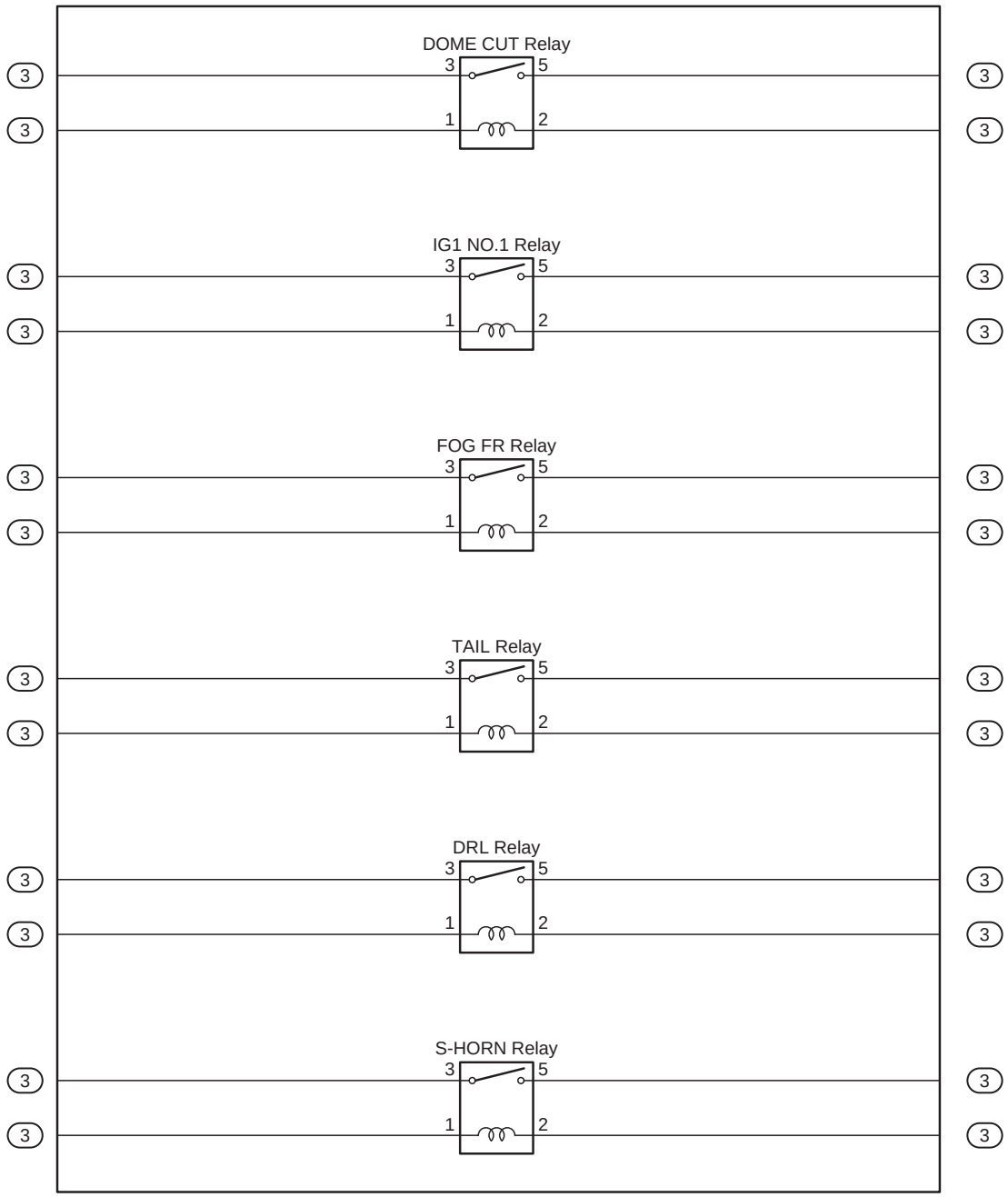

cardiagn.com

④ : R/B Assembly No. 4	LHD : Cowl Side Panel RH
	RHD : Cowl Side Panel LH

(LHD)

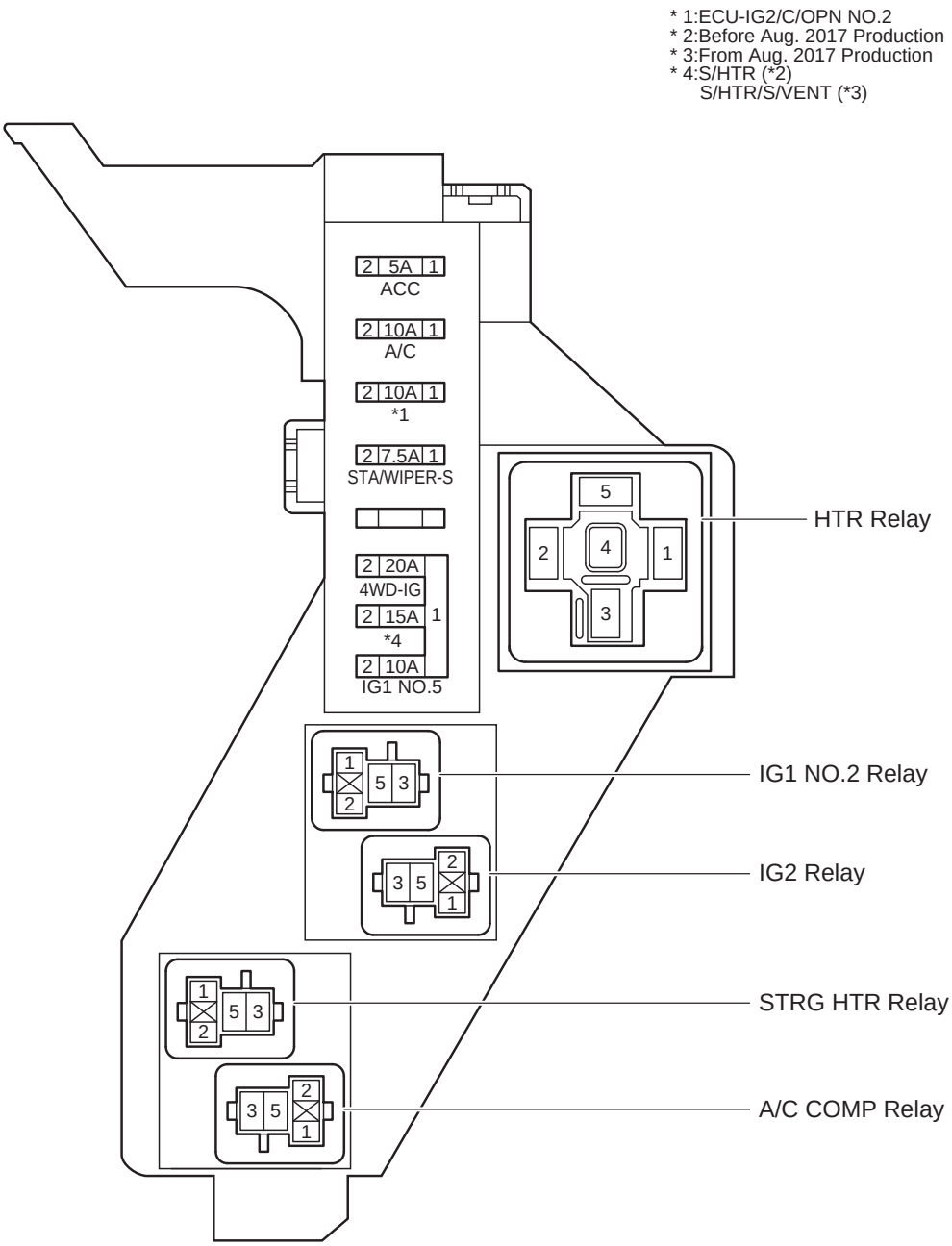

cardiagn.com

(RHD)

* 1:ECU-IG2/C/OPN NO.2

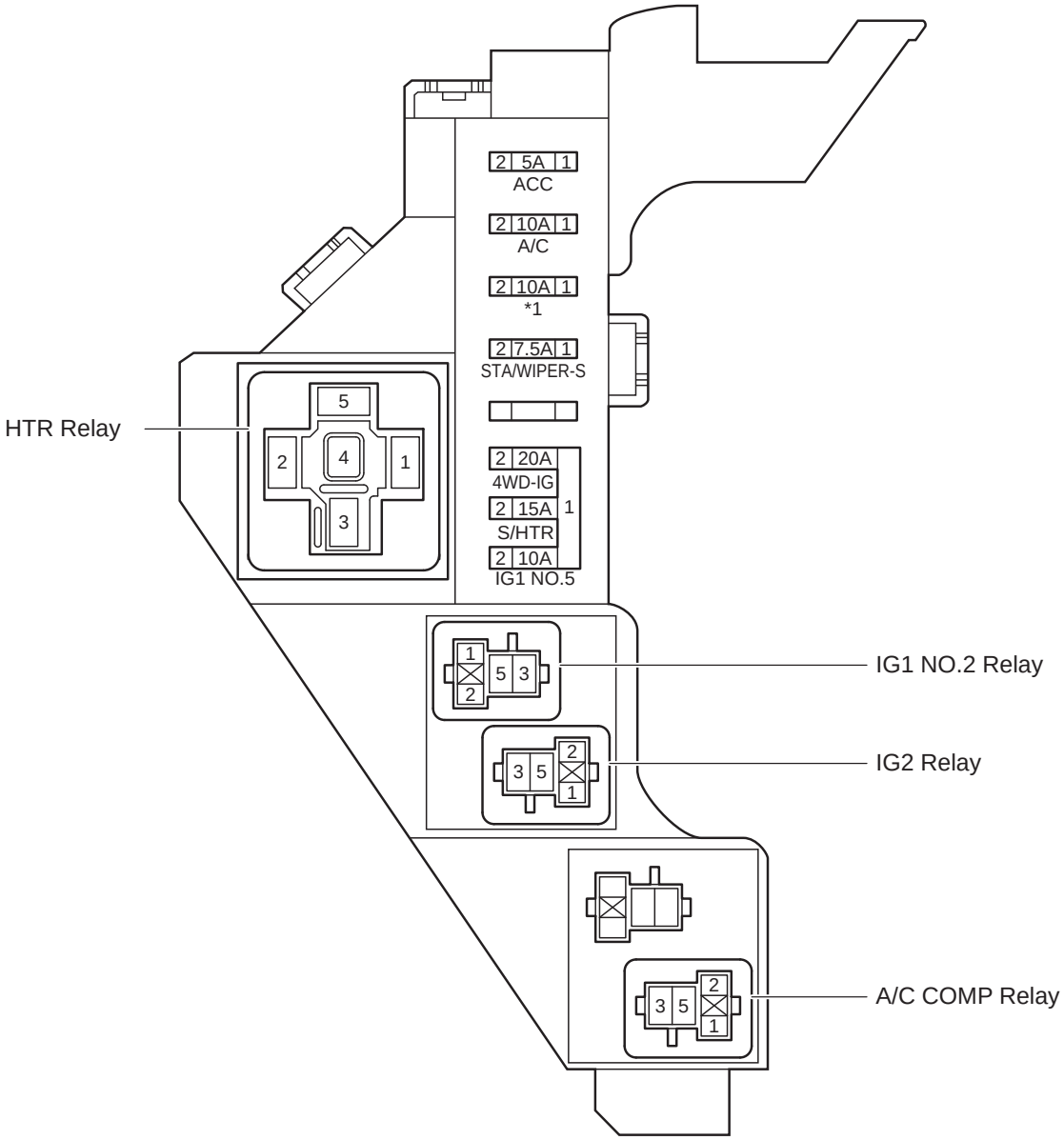

cardiagn.com

[R/B Assembly No. 4 Inner Circuit]

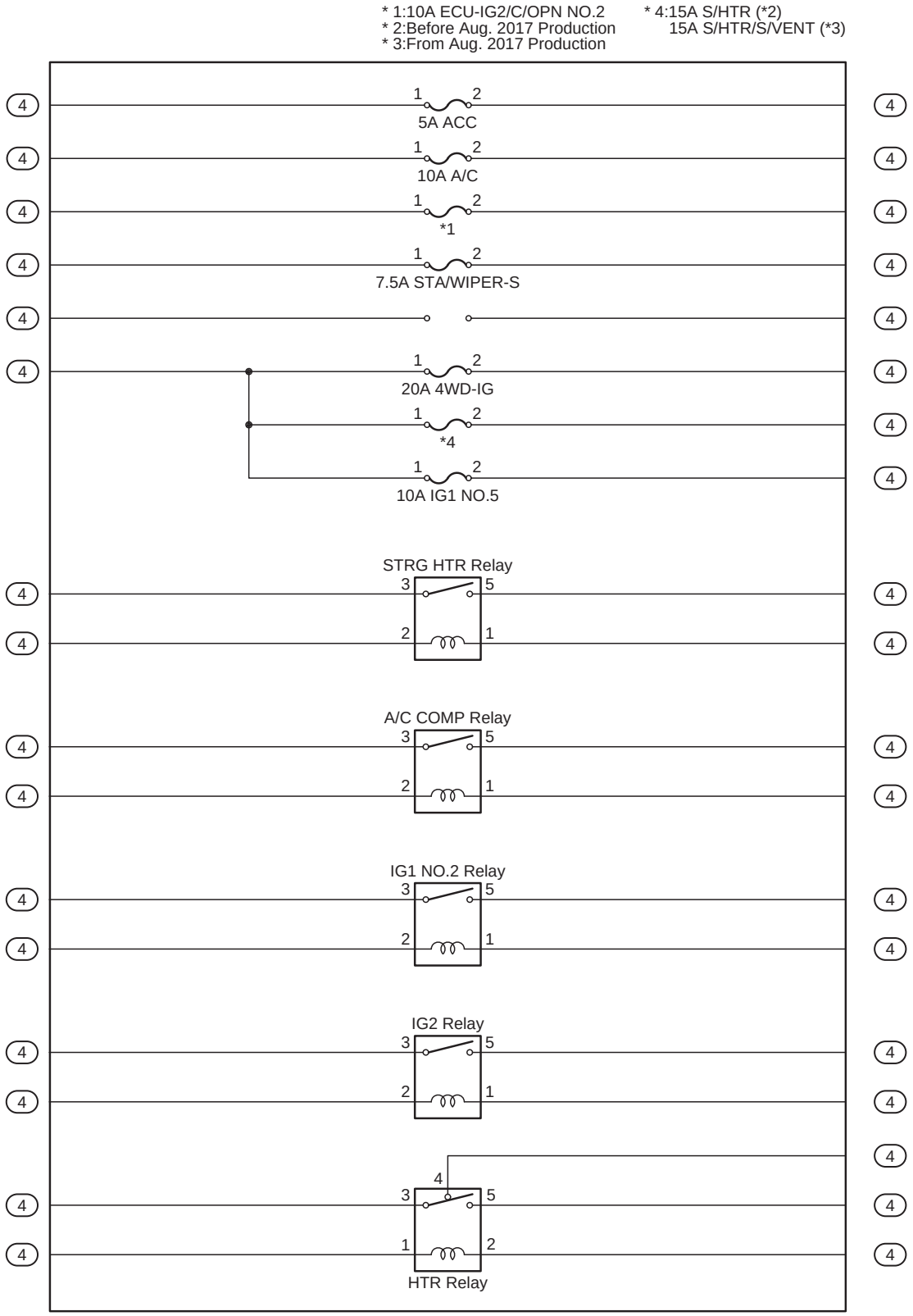

cardiagn.com

⑤ : R/B Assembly No. 5	LHD : Instrument Panel Brace RH RHD : Instrument Panel Brace LH

(LHD)

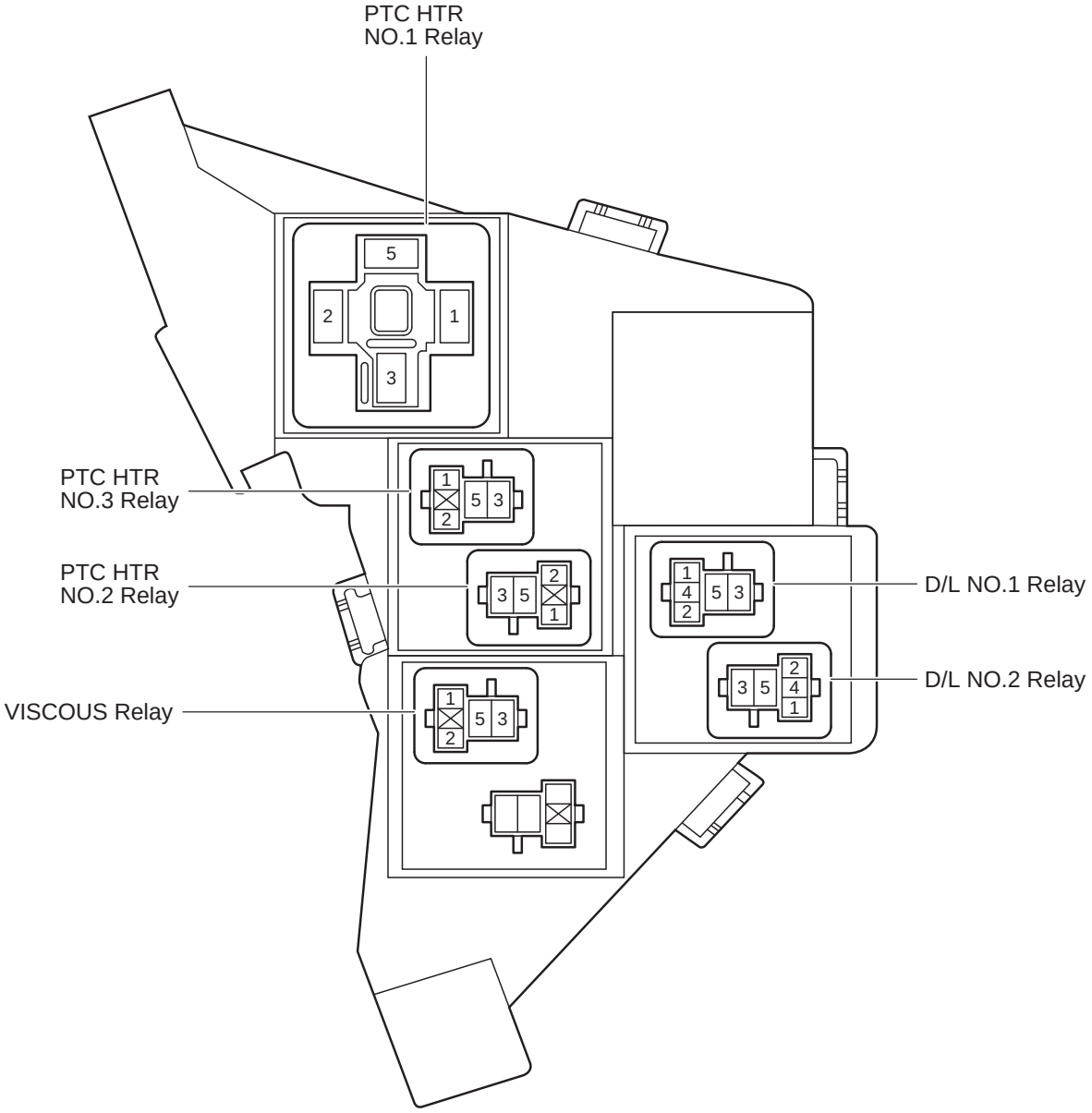

cardiagn.com

(RHD)

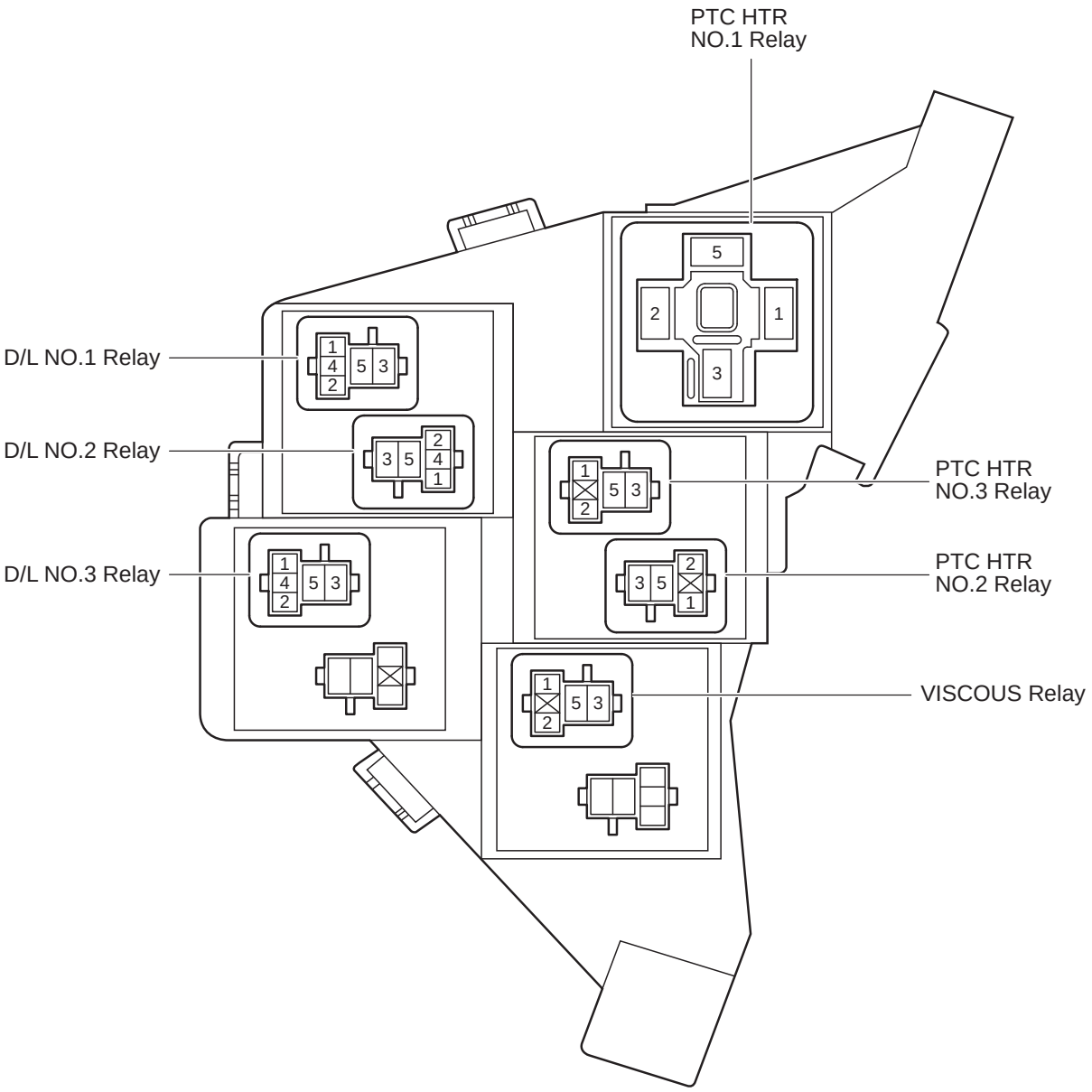

cardiagn.com

[R/B Assembly No. 5 Inner Circuit]

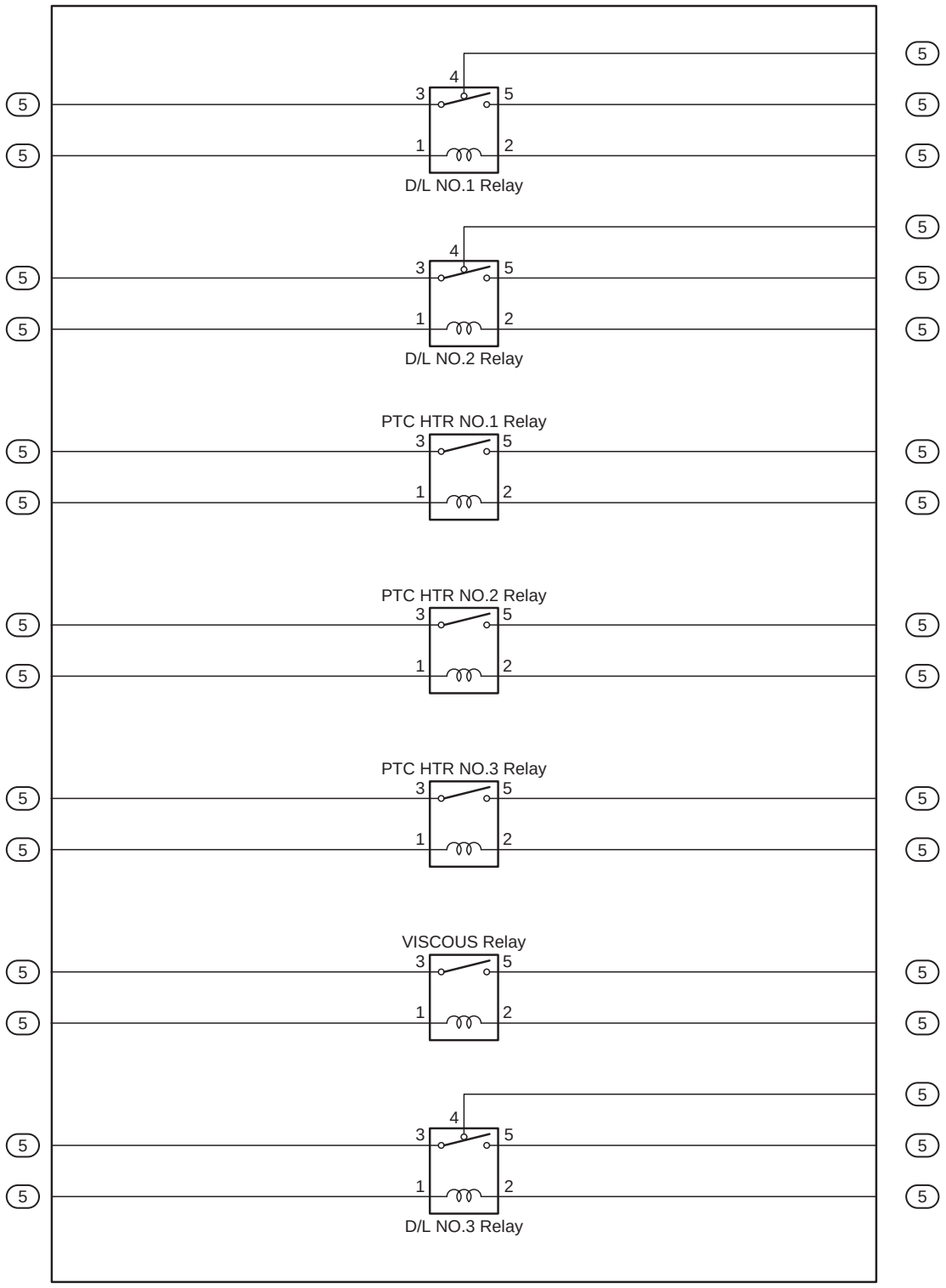

cardiagn.com

⑥ : R/B Assembly No. 6	Cowl Side Panel LH

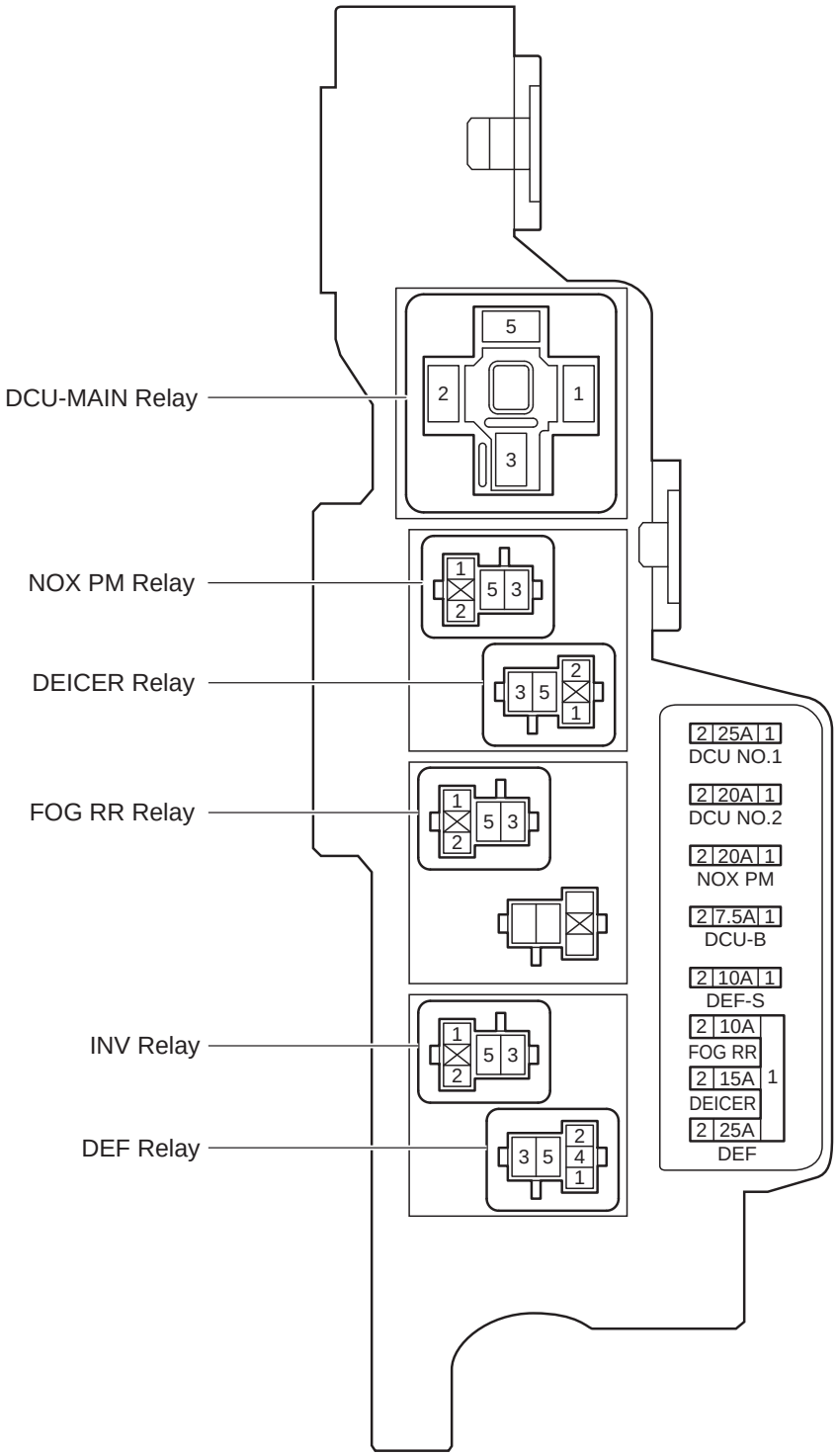

cardiagn.com

[R/B Assembly No. 6 Inner Circuit]

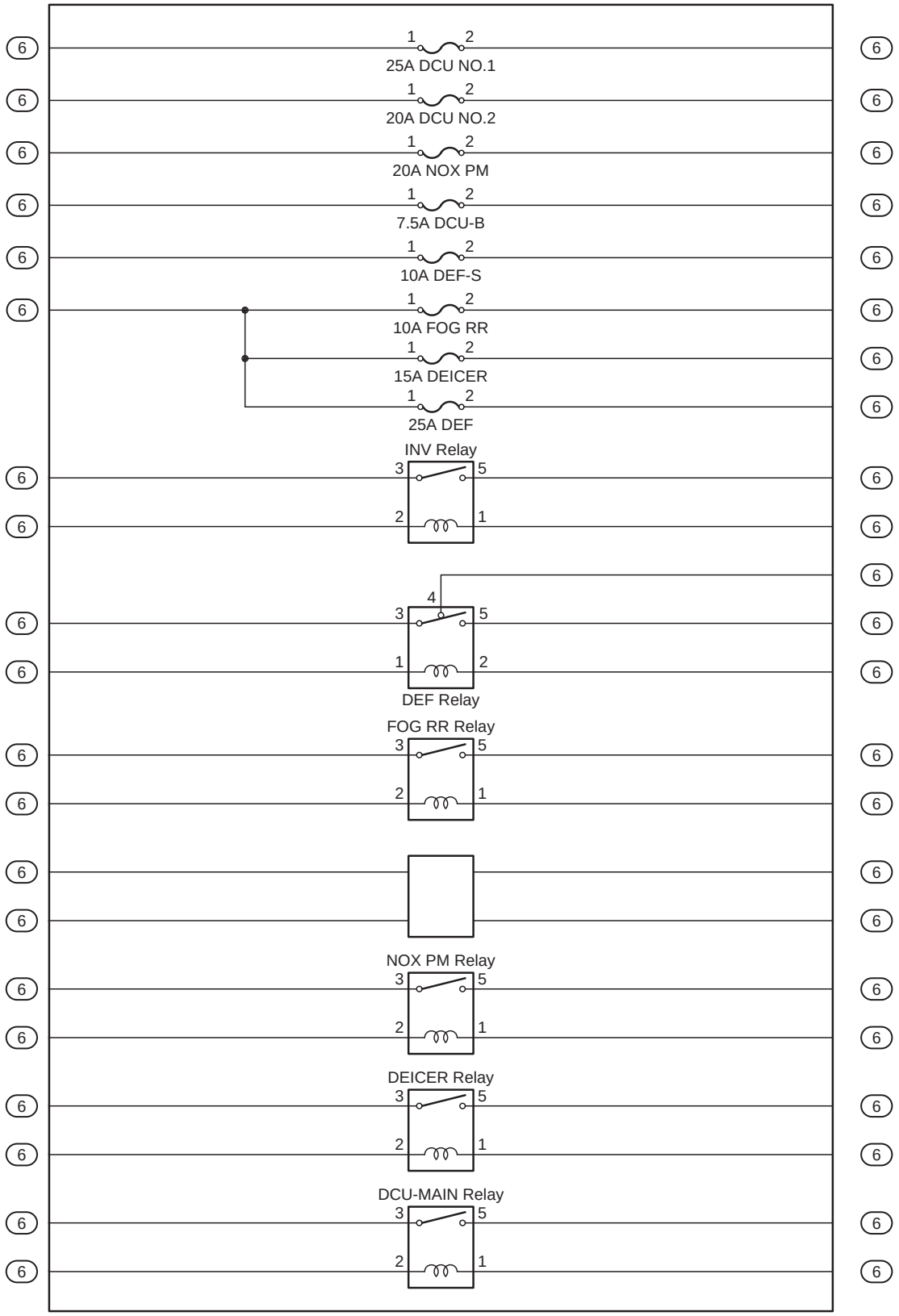

cardiagn.com

[Seat]

* 1:RHD
* 2:LHD

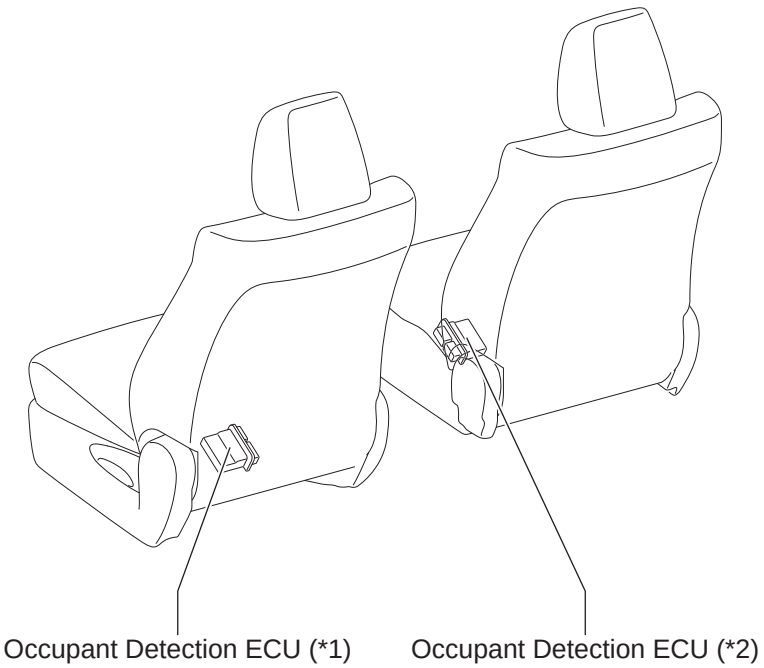

cardiagn.com